Advance Product Data*

Aquazone™ 50PCH, PCV, PCD007-070 Compact Water Source Heat Pumps with Puron® Refrigerant (R-410A)

***For units purchased on or after May 12, 2014.**

1/2 to 6 Nominal Tons

AQUAZONE™

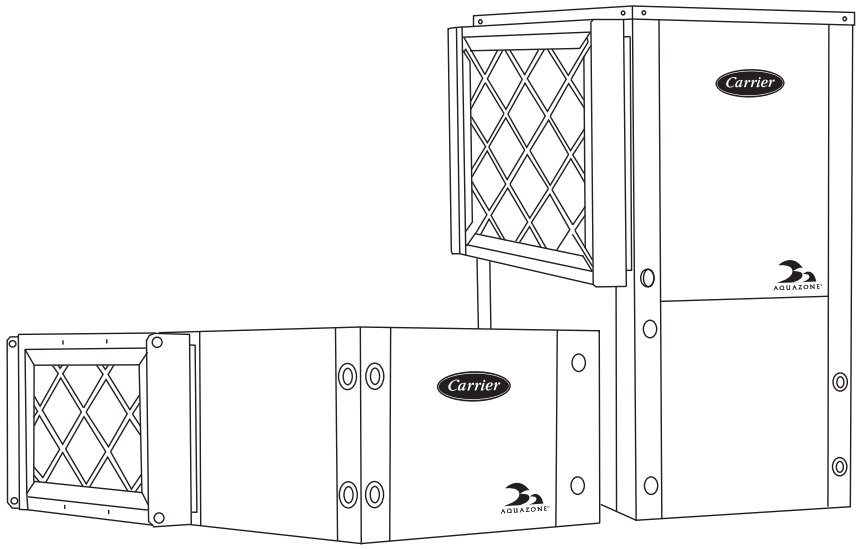

ASHRAE 90.1 COMPLIANT

Puron®

Single-package horizontally and vertically mounted water source heat pumps (WSHPs) with solid-state controls.

- Unique double isolation compressor mounting via vibration isolating rubber grommets for quiet operation
- Insulated divider and separate compressor/air handler compartments
- Two service panels for compressor section
- Copeland scroll compressors (Rotary 007-015, Reciprocating 018-042, Scroll 048-070)
- Suitable for geothermal (with extended range option) and boiler/tower use with an operating temperature range of 20 to 110 F
- Hot gas reheat (HGR) available for dehumidification capability
- Backward compatibility for replacing older units from various manufacturers
- Field convertible discharge air arrangement for horizontal units
- PSC three-speed fan motor
- Internally trapped condensate drain line (vertical units only)
- Flexible and reliable multiple protocol WSHP Open controller can use BACnet*, Modbus†, and N2 protocols for integrating energy efficiency and precise unit control (field-installed accessory)
- Mute package for quiet operation
- Optional tin-plated copper tubing and polymer coated aluminum fin evaporator coil available
- Non-ozone depleting Puron refrigerant (R-410A)

Features/Benefits

Carrier's Aquazone WSHPs are an efficient, compact alternative for all boiler/tower and retrofit applications

© Carrier Corporation 2014

Features/Benefits (cont)

Operating efficiency

Aquazone WSHP units offer cooling EERs (energy efficiency ratios) to 17.7 and heating COPs (coefficients of performance) to 5.3.

All efficiencies stated are in accordance with standard conditions under ISO (International Organization for Standardization) Standard 13256-1:1998 and provide among the highest ratings in the industry, exceeding ASHRAE (American Society of Heating, Refrigerant and Air-Conditioning Engineers) 90.1 Energy Standards.

High quality construction and testing

All units are manufactured to meet extensive quality control standards. An automated control system provides continuous monitoring of each unit and performs quality control checks as equipment progresses through the production process. Standard construction features of the Aquazone™ units include:

Cabinet — Heavy gage galvanized sheet metal cabinet construction enables part standardization (i.e., minimal number of parts) and modular design. Cabinet interior surfaces are lined with $^1/_2$ in. thick, $1^1/_2$ lb acoustic type insulation with a clear acoustic coating. Sheet metal surfaces are treated for maximum corrosion protection to provide resilience for long term vitality. Compact cabinet dimensions fit tight space limitations in both horizontal and vertical configurations.

Compressor — Aquazone standard efficiency units include a rotary compressor in sizes 007-015, a reciprocating compressor in size 018-042, a scroll compressor in size 048-070 units. Compressors are mounted on an isolated system (i.e., from the cabinet) that maximizes vibration isolation and minimizes transmission to the unit structure.

Permanent split capacitor motors (PSC) — The standard motor for all 50PC model heat pumps is a PSC motor. For all models other than 575 volt units, the supplied motor is a three speed motor; 575 volt motors are single speed.

Constant Torque — The 50PC's constant torque blower motor option offers improved efficiency (ranging from 5 to 15% based on laboratory test data) over the standard PSC motor. This motor is similar in function to a PSC, but can handle up to 1 in. w.g. external static pressure making it a wise choice for high filtration applications. These motors are available in unit sizes 015 to 070. This motor option is an excellent choice for retrofit.The constant-torque motors do not require a neutral wire for 460/3 power.

Hanging Brackets — All horizontal units come standard with hanging bracket kits for suspending the unit from field-supplied hanger rods. These kits include heavy duty steel brackets and rubber grommets for sound and vibration isolation from the building structure.

Water Connections — All water connections are heavy duty bronze FPT fittings securely fastened to the unit corner post. This allows connecting to a flexible hose kit without the use of a backup wrench making for easier, faster installation.

Two-Position Water Valve — The two-position motorized water valve is optional on all unit sizes and is a great energy savings option. The valve opens to allow 100% fluid flow through the coaxial heat exchanger only when there is a call for cooling or heating. Closing off fluid flow to the unit when there is no call for cooling or heating reduces system operating costs, when using variable speed pumping, by reducing the speed of the primary loop pumps.

Refrigeration/water circuit — Most units have a sealed refrigerant circuit including a high-efficiency rotary, reciprocating or scroll compressor. Simplified refrigerant circuits provide easy maintenance, higher accuracy and excellent performance. Also, standard are a reversing valve (4-way valve), water-to-refrigerant coaxial (tube-in-tube) coil, and enhanced aluminum fin/rifled copper tube air-to-refrigerant heat exchanger coil.

ARI/ISO — Aquazone units have ARI/ISO, NRTL (Nationally Recognized Testing Lab), or CSA (Canadian Standards Association) labels and are factory tested under normal operating conditions at nominal water flow rates. Quality assurance is provided via testing report cards shipped with each unit to indicate specific unit performance under cooling and heating modes. Water source heat pumps are New York City MEA (Materials Equipment and Acceptance) 60-00-E rated.

Quiet operation

All 50PC units have a unique floating-base pan; the compressor is mounted on a heavy steel plate which rests on a high density rubber pad on the base of the unit. In addition, compressors are mounted on rubber grommets. This double isolation is standard in all 50PC units preventing vibration and noise transmission from the compressor to the unit structure, resulting in exceptionally quiet operation.

→ Cabinets are fully insulated to reduce noise transmission, low speed blowers are used for quiet operation through reduced outlet air velocities, and air-to-refrigerant coils are designed for lower airflow coil face velocities. A

Table of contents

	Page
Features/Benefits	1-4
Model Number Nomenclature	5
ARI/ISO Capacity Ratings	6
Physical Data	7
Options and Accessories	8
Dimensions	9-12
Performance Data	13-27
Electrical Data	28,29
Application Data	30,31
Guide Specifications	32-35

mute package is also available for extremely noise sensitive applications.

Optional evaporator coil protection

All units come standard with a copper coil aluminum fin evaporator coil. These evaporator coils employ lanced fin and rifled tubing for maximum heat transfer. Large face areas result in lower face velocity reducing sound while ensuring high latent heat removal for maximum dehumidification in the cooling mode.

Optional tin electro-plated copper tubing with high-tech polymer coated aluminum fins protect the evaporator coil from all forms of corrosive elements in the airstream. Corrosion often results in refrigerant leaks and eventual failure of the air coil costing hundreds of dollars to replace. Studies have also shown that these air coil coatings improve moisture shedding and therefore improve a units moisture removal capability resulting in a more comfortable indoor environment. The 50PCH, PCV, PCD units assure both maximum air coil life and comfort.

Design flexibility

Airflow configurations for horizontal units are available in patterns including left or right return, and top, straight, end, or bottom discharge. Horizontal units are field convertible from left or right discharge to back discharge. Vertical units are available in four airflow patterns including top discharge with front, right or left return. Standard water temperature range between 50 and 100 F offers maximum design flexibility for boiler/tower applications. Water flow rates as low as 1.5 gpm per ton assist with selection from a various range of circulating pumps. Factory-installed options are offered to meet specific design requirements.

Safe, reliable operation

Standard safety features for the refrigerant circuit include a high-pressure switch, low-pressure sensor to detect refrigerant loss. Equipment safety features include water loop temperature monitoring, voltage protection, water coil freeze protection, and standard electronic condensate overflow shutdown. All safety features are tested and run at the factory to assure proper operation of all components and safety switches.

All components are carefully designed and selected for endurance, durability, and carefree day-to-day operation.

The Aquazone™ unit is shipped to provide internal and external equipment protection. Shipping supports are placed under the blower housing and compressor feet. In addition, horizontal and vertical units are both mounted on oversized pallets with lag bolts for sturdiness and maximum protection during transit.

Ease of installation

The Aquazone unit is packaged for simple low cost handling and requires minimal installation. All units are prewired and factory charged with refrigerant. Horizontal units include factory-installed hanger isolation brackets. Vertical units have an internally trapped condensate drain to reduce labor associated with installing an external trap for each unit. Water connections (FPT) and condensate drains (FPT) are $^3/_4$ in. in diameter and are anchored securely to the unit cabinet.

Simple maintenance and serviceability

The Aquazone WSHP units are constructed to provide easy maintenance. All units allow easy access to the compressor section from 2 sides with large removable panels. Additional panels allow access to the blower and control box sections.

The blower housing assembly can be serviced without disconnecting ductwork from the dedicated blower access panel. Blower units come with permanently lubricated bearings for worry-free performance. Blower inlet rings allow blower wheel removal without having to remove the housing or ductwork connections.

Electrical disconnection of the blower motor and control box is easily accomplished via quick disconnects on each component.

Easy removal of the control box from the unit provides access to all refrigeration components.

The refrigeration circuit is easily tested and serviced through high and low pressure ports integral to the refrigeration circuit.

Maximum control flexibility

Aquazone water source heat pumps provide reliable control operation using a standard microprocessor board with flexible alternatives for many direct digital controls (DDC) applications including the Carrier Comfort Network® (CCN) controls and open protocol systems.

Carrier's Aquazone standard unit solid-state control system, the Complete C, provides control of the unit compressor, reversing valve, fan, safety features, and troubleshooting fault indication features. The Complete C control system is a user friendly, low cost, advanced WSHP control board. Many features are field selectable to maximize flexibility in field installation. The overall features of this standard control system include:

50-va transformer assists in accommodating accessory loads.

Anti-short cycle timer provides a minimum off time to prevent the unit from short cycling. The 5-minute timer energizes when the compressor is deenergized, resulting in a 5-minute delay before the unit can be restarted.

Random start relay provides a random delay in energizing each different WSHP unit. This option minimizes peak electrical demand during start-up from different operating modes or after building power outages. Each controller has a unique random start delay ranging from 270 to 300 seconds after power is applied to the board.

High and low pressure refrigerant protection safeguards against unreliable unit operation and prevents refrigerant from leaking.

Condensate overflow sensor is an electronic sensor mounted to the drain pan. When condensate pan liquid reaches an unacceptable level, the unit is automatically deactivated and placed in a lockout condition. The sensor recognizes 30 continuous seconds of overflow as a fault condition.

High and low voltage protection provides safety protection from excessive or low voltage conditions.

Automatic intelligent reset will automatically restart unit 5 minutes after shutdown if the fault has cleared. Should a fault occur 3 times sequentially, lockout will occur.

Accessory output (24-v) is provided to cycle a motorized water valve or damper actuator with compressor in applications such as variable speed pumping arrangements.

Performance monitor (PM) is a feature that monitors water temperatures to warn when the heat pump is operating inefficiently or beyond typical operating range. Field selectable switch initiates a warning code on the unit display.

Water coil freeze protection (selectable for water or antifreeze) provides a field selectable switch for water and water/glycol solution systems which initiates a fault when temperatures exceed the selected limit for 30 continuous seconds.

Air coil freeze protection (check filter operation) provides a field selectable switch for assessing excessive filter pressure drop. The switch initiates a fault when temperatures exceed the selected limit for 30 continuous seconds.

Alarm relay setting is a selectable 24-v or pilot duty dry contact for activating a remote alarm.

Low pressure bypass timer — The low pressure switch is bypassed for 120 seconds after a call for compressor operation to prevent nuisance low pressure lockouts during cold start-up in the heating mode.

Service Test mode with diagnostic LED (light-emitting diode) allows service personnel to check the operation of the WSHP and control system efficiently. Upon entering Test mode, time delays speed up, and the Status LED flashes a code to indicate the last fault experienced. This mode provides easy fault diagnosis; based on the fault code that the status LED flashes, Carrier troubleshooting tables provide easy reference to typical problems.

LED visual output indicates high pressure, low pressure, low voltage, high voltage, air/water freeze protection, condensate overflow, and control status via a LED panel.

Puron® refrigerant (R410-A)

Puron refrigerant (R-410A) is a non-chlorine based enviromentally balanced, non-ozone depleting refrigerant. Puron refrigerant characteristics, compared to R-22, have:

- Binary and near azeotropic mixture of 50% R-32 and 50% R-125.
- Higher efficiencies (50 to 60% higher operating pressures).
- Virtually no glide. Unlike other alternative refrigerants, the two components in Puron refrigerant have virtually the same leak rates.

* Sponsored by ASHRAE (American Society of Heating, Refrigerating and Air Conditioning Engineers.
† Registered trademark of Schneider Electric.

Model number nomenclature

→ **50PCH 024 J C C 3 A 1 C -**

Aquazone™ Compact Water Source Heat Pump with Puron® Refrigerant (R-410A)
50PCH – Horizontal Configuration
50PCV – Vertical Upflow Configuration
50PCD – Vertical Downflow Configuration

Nominal Capacity - Tons

007 – 1/2*	**018** – 1-1/2	**042** – 3-1/2
009 – 3/4*	**024** – 2	**048** – 4
012 – 1*	**030** – 2-1/2	**060** – 5
015 – 1-1/4	**036** – 3	**070** – 6

Airflow Configuration

	Return	Discharge	Blower Motor
B –	Right	End	PSC
E –	Left	Right	PSC
N –	Right	Left	Constant Torque
P –	Right	End	Constant Torque
S –	Left	End	PSC
W –	Left	Right	Constant Torque
Y –	Left	End	Constant Torque
Z –	Right	Left	PSC

Vertical Configuration

J –	Left	Top/Bottom	Constant Torque
K –	Right	Top/Bottom	Constant Torque
L –	Left	Top/Bottom	PSC
R –	Right	Top/Bottom	PSC

Control
C – Standard C Microprocessor Control
D – Standard D Microprocessor Control

LEGEND
HGB — Hot Gas Bypass
HGR — Hot Gas Reheat
PSC — Permanent Split Capacitor

* Unit sizes not available in 50PCD.

Factory Installed Options
1 – Standard
2 – Economizer
4 – MERV 8 Filter, Economizer
7 – MERV 13 Filter, Economizer
8 – MERV 8 Filter
9 – MERV 13 Filter

Operating Range/Sound Option
A – Extended Range
C – Standard
D – Closed Cell Foam, Extended Range
E – 1/2-in. Closed Cell Foam
F – Closed Cell Foam, Extended Range, Mute
J – Extened Range, Mute
N – Mute Package
P – Closed Cell Foam with Mute

Valve Options
A – 2-Way Solenoid
B – Measureflow
C – None
D – 2-Way Solenoid with Measureflow

Revision Code
A – Current Revision

Voltage
0 – 115-1-60
1 – 575-3-60
3 – 280/230-1-60
4 – 265-1-60
5 – 280/230-3-60
6 – 460-3-60
A – 575-3-60 with Disconnect
B – 115-1-60 with Disconnect
C – 208/230-1-60 with Disconnect
D – 265-3-60 with Disconnect
E – 208/230-3-60 with Disconnect
F – 460-3-60 with Disconnect

Refrigerant Circuit Options

A – Coated, Evap	**N** – CuNi
C – Standard	**P** – HGR, CuNi
D – HGR, Coated Evap	**R** – HGB, HGR, Coated Evap
E – HGR	**S** – HGB, CuNi
F – HGR, CuNi, Coated Evap	**T** – HGB
J – CuNi, Coated Evap	**U** – HGB, Coated Evap
L – HGB,HGR	**V** – HGB, HGR, CuNi, Coated Evap
M – HGB, HGR, CuNi	**W** – HGB, CuNi, Coated Evap

ARI/ISO capacity ratings

UNIT SIZE	PSC MOTOR (BASE)								CONSTANT TORQUE (OPTION)							
	WATER LOOP HEAT PUMP				GROUND LOOP HEAT PUMP				WATER LOOP HEAT PUMP				GROUND LOOP HEAT PUMP			
	COOLING CAPACITY	EER	HEATING CAPACITY	COP	COOLING CAPACITY	EER	HEATING CAPACITY	COP	COOLING CAPACITY	EER	HEATING CAPACITY	COP	COOLING CAPACITY	EER	HEATING CAPACITY	COP
007	6,100	12.20	7,800	5.30	6,800	15.10	4,900	3.40	—	—	—	—	—	—	—	—
009	8,200	12.40	9,900	4.70	8,700	14.60	5,740	3.20	—	—	—	—	—	—	—	—
012	10,900	11.80	13,000	4.30	11,800	14.00	8,700	3.10	—	—	—	—	—	—	—	—
015	13,400	12.10	16,100	4.20	14,200	14.00	11,300	3.10	13,700	13.90	15,500	4.40	14,400	16.20	10,700	3.30
018	19,400	13.40	22,200	4.60	21,200	15.80	14,300	3.50	19,700	14.40	21,900	4.80	21,500	17.10	14,100	3.70
024	23,400	13.40	26,600	4.40	25,000	15.50	17,000	3.40	23,800	14.50	26,200	4.60	25,400	16.80	16,700	3.60
030	29,200	13.10	33,400	4.30	31,000	15.30	20,900	3.20	30,000	15.00	32,800	4.60	31,600	17.50	20,400	3.40
036	37,900	14.70	41,800	4.60	39,900	16.90	26,900	3.50	38,200	15.40	41,400	4.70	40,200	17.70	26,500	3.60
042	40,000	12.60	46,300	4.20	42,600	14.50	31,000	3.20	40,900	14.10	45,300	4.40	43,500	16.30	30,100	3.50
048	45,900	12.90	56,400	4.30	48,800	14.90	35,400	3.40	46,800	14.20	55,600	4.50	49,600	16.30	34,600	3.60
060	57,900	13.20	67,400	4.20	60,100	15.00	47,100	3.20	59,000	14.30	66,400	4.30	61,100	16.40	46,200	3.30
070	64,000	13.30	72,800	4.40	66,400	15.00	50,800	3.40	65,200	14.60	71,800	4.60	67,600	16.60	50,000	3.50

LEGEND

COP — Coefficient Performance
EER — Energy Efficiency Ratio

NOTES:
1. Ground loop heat pump ratings require an extended range option.
2. Rating based upon ARI/ANSI 13256-1 with 1-in. disposable filter.

Physical data

→ **PHYSICAL DATA — 50PCH,PCV (007-070), 50PCD (015-070) UNITS**

50PCH,PCV,PCD UNIT	007*	009*	012*	015	018	024	030
COMPRESSOR (1 each)	Rotary				Reciprocating		
Maximum Water Working Pressure (psig/kPa)	400						
PSC Fan Motor and Blower							
Fan Motor Type/Speeds	PSC/3						
Fan Motor (hp)	1/10				1/4		
Blower Wheel Size (Dia x W) (in.)	4.5 x 4.5		5.5 x 4.5		9 x 7		
Constant Torque Fan Motor and Blower							
Fan Motor Type/Speeds	PSC/3			Constant Torque/5			
Fan Motor (hp)	1/10			1/3		1/2	
Blower Wheel Size (Dia x W) (in.)	4.5 x 4.5		5.5 x 4.5	9 x 7			
WATER CONNECTION SIZE FPT (in.)	3/4						
Coaxial Coil Volume (gal)	0.04	0.06	0.08	0.09	0.14		0.24
Condensate Connection in. FPT	3/4						
VERTICAL CABINET							
Refrigeration Charge (oz)	14	15	18	19	28	29	37
Air Coil Dimensions (H x W)	10 x 14			12 X 16.5	16 X 16.5	20 x 16.5	
Std. Filter - 1" Throwaway (L x H)	10 x 16			16 x 20		20 x 20	
Opt. Filter - 2" MERV 8 or 13 Throwaway (L x H)	10 x 16			16 x 20		20 x 20	
Weight - Operating (lbs)	98	103	105	123	173	177	190
Weight - Shipping (lbs)	126	130	132	151	201	205	217
HORIZONTAL CABINET							
Refrigeration Charge (oz)	17	19			29		37
Air Coil Dimensions (H x W)	10 x 14			12 x 16.5	16 x 16.5	16 x 20.5	
Std. Filter - 1" Throwaway (L x H)	10 x 16			16 x 20		16 x 25	
Opt. Filter - 2" MERV 8 or 13 Throwaway (L x H)	10 x 16			16 x 20		16 x 25	
Weight - Operating (lbs)	96	100	105	136	174	181	190
Weight - Shipping (lbs)	128	132	134	158	208	212	224

50PCH,PCV,PCD UNIT	036	042	048	060	070
COMPRESSOR (1 each)	Reciprocating		Scroll		
Maximum Water Working Pressure (psig/kPa)	400				
PSC Fan Motor and Blower					
Fan Motor Type/Speeds	PSC/3				
Fan Motor (hp)	1/2		3/4		
Blower Wheel Size (Dia x W) (in.)	9 x 7	10 x 8		11 x 9	
Constant Torque Fan Motor and Blower					
Fan Motor Type/Speeds	Constant Torque/5				
Fan Motor (hp)	1/2	3/4		1	
Blower Wheel Size (Dia x W) (in.)	9 x 7	10 x 8		11 x 9	
WATER CONNECTION SIZE FPT (in.)	3/4		1		
Coaxial Coil Volume (gal)	0.27		0.49	0.62	
Condensate Connection in. FPT	3/4				
VERTICAL CABINET					
Refrigeration Charge (oz)	48		52	59	73
Air Coil Dimensions (H x W)	24 x 20.2		24 x 26.75		32 x 26.6
Std. Filter - 1" Throwaway (L x H)	24 x 24		24 x 30		16 x 30 (2)
Opt. Filter - 2" MERV 8 or 13 Throwaway (L x H)	24 x 24		24 x 30		16 x 30 (2)
Weight - Operating (lbs)	229	239	287	307	336
Weight - Shipping (lbs)	255	265	312	331	360
HORIZONTAL CABINET					
Refrigeration Charge (oz)	46	43	44	64	61
Air Coil Dimensions (H x W)	18 x 27.5		20 x 32		20 X 42
Std. Filter - 1" Throwaway (L x H)	18 x 30		20 x 34.5		20 x 24 (2)
Opt. Filter - 2" MERV 8 or 13 Throwaway (L x H)	18 x 30		20 x 34.5		20 x 24 (2)
Weight - Operating (lbs)	226	231	274	288	316
Weight - Shipping (lbs)	270	264	299	318	365

LEGEND

FPT — Female Pipe Thread
PSC — Permanent Split Capacitor

* Unit sizes not available in 50PCD.

Options and accessories

Factory-installed options

Cupronickel heat exchangers are available for higher corrosion protection for applications such as open tower, geothermal, etc. Consult the water quality guidelines for proper application and selection of this option.

Evaporator coil protection — Optional tin electroplated copper tubing with high-tech polymer coated aluminum fins will protect the evaporator coil from all forms of corrosive elements in the airstream.

Extended range units insulate the coaxial coil to prevent condensation, and therefore potential dripping problems, in applications where the entering water temperature is below the normal operating range (less than 60 F). Units are capable of operating at a range of 25 to 110 F. Thermal Expansion Valves (TXVs) come with the optional extended range units and are designed to vary the flow of refrigerant depending on the load. TXVs provide unit optimization and more stable control over a wider range of operating conditions.

Hot Gas Reheat (HGR) allows the unit to not only control the space temperature, but also humidity levels within the conditioned space. The Hot Gas Reheat option allows cooling and dehumidification to satisfy both the thermostat and humidistat while preventing over-cooling of the space while in the dehumidification mode. A hot gas reheat valve and a reheat coil are included in the refrigerant circuit.

Hot Gas Bypass prevents icing of the air coil when the unit is operating at low cooling load conditions. The hot gas bypass valve located in the compressor discharge line diverts hot gas to the inlet of the air coil. The valve is factory set to open when the evaporating pressure falls to 90 psi and will modulate to prevent the pressure falling any lower. This setting is field adjustable and this set point may be adjusted as required.

Waterside Economizer is available for applications where perimeter heating is taking place while core cooling is required. Perimeter heat pumps operating in the heating mode extract heat from the building loop, thus dropping the building loop fluid temperature.

Sound attenuation package (mute package) is available for applications that require especially low noise levels. With this option, a double application of sound attenuating material is applied to the internal divider, side panels, top panels, and bottom panels. Sound attenuating material is also added to the fan housing. Spring isolation is added to the compressor mounting. The mute package in combination with standard unit noise reduction features as mentioned previously provide sound levels and noise reduction to the highest degree.

Constant torque motor option offers improved efficiency (ranging from 5 to 15% based on laboratory test data) over the standard PSC motor. This constant torque motor is similar in function to a PSC, but can handle up to 1 in. wg external static pressure making it a wise choice for high filtration applications. The 460-v constant torque motors do not require a neutral wire.

Field-installed accessories

WSHP Open multiple protocol controller is a proactive controller capable of communicating BACnet, Modbus, N2, and LON (with a separate card) protocols. The controller is designed to allow users access and ability to change and configure multiple settings and features including indoor air quality (IAQ), waterside economizer controls, etc.

Dimensions

50PCH UNIT

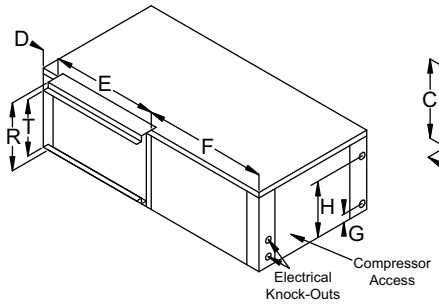

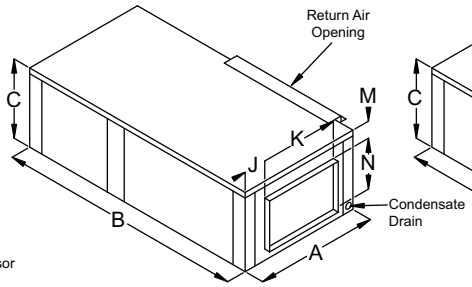

Left Hand Return End Blow (FLE)

NOTE: Models 048 and 060 Left Hand Return units have condenser water connections on the front right and electrical knockouts on the front left.

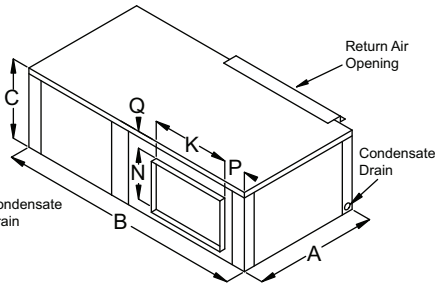

Left Hand Return Straight Through (FLS)

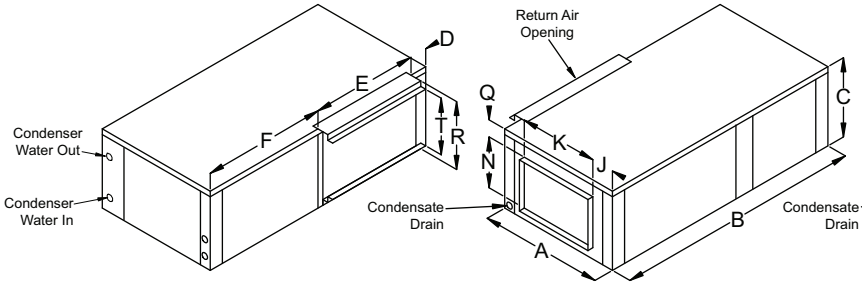

Right Hand Return End Blow (FRE)

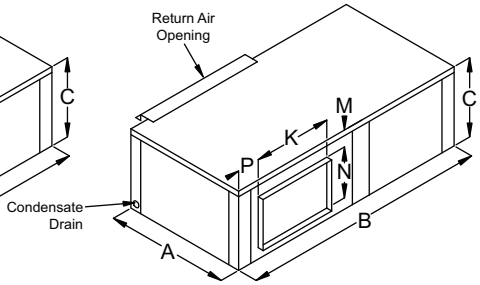

Right Hand Return Straight Through (FRS)

LEGEND

FLE — Front Water, Left Return, End Supply
FLS — Front Water, Left Return, Straight Through Supply
FRE — Front Water, Right Return, End Supply
FRS — Front Water, Right Return, Straight Through Supply
R/A — Return Air

Service Clearances

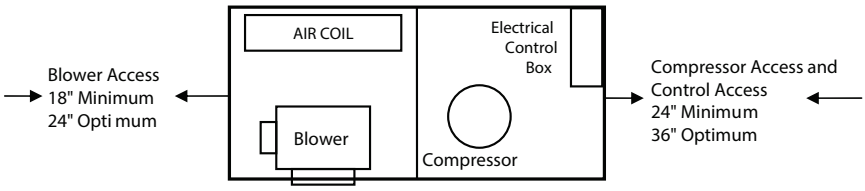

50PCH007-070 UNITS

50PCH UNIT SIZE	A WIDTH	B DEPTH	C HEIGHT	D CAB END TO FILTER RACK	E R/A DUCT WIDTH	F CAB FRONT TO FILTER RACK	G WATER INLET	H WATER OUTLET	J SIDE TO DISC. WIDTH	K DISC. WIDTH	M TOP TO DISC. (FLE AND FRS)	N DISC. HEIGHT	P END TO DISC. (STR)	Q TOP TO DISC. (FRE AND FLS)	R FILTER RACK HEIGHT	T R/A DUCT FLANGE HEIGHT	CONDENSER WATER CONNECTIONS FPT	RECOMMENEDED REPLACEMENT NOMINAL FILTER SIZE
007	19.0	33.0	11.5	1.5	16.15	15.35	2.38	9.50	5.375	6.30	5.97	4.10	4.875	1.41	11.3	8.6	3/4	10x16x1
009	19.0	33.0	11.5	1.5	16.15	15.35	2.38	9.50	5.375	6.30	5.97	4.10	4.875	1.41	11.3	8.6	3/4	10x16x1
012	19.0	33.0	11.5	1.5	16.15	15.35	2.38	9.50	5.250	6.43	6.31	4.10	4.750	1.14	11.3	8.6	3/4	10x16x1
015	22.0	43.0	17.0	1.5	20.15	21.35	2.86	15.00	8.150	6.43	9.55	4.10	7.650	3.40	16.8	15.0	3/4	16x20x1
018	22.0	43.0	17.0	1.5	20.15	21.35	2.86	14.13	5.420	9.13	6.11	9.65	4.920	1.23	16.8	15.0	3/4	16x20x1
024	22.0	43.0	17.0	1.5	25.00	16.50	2.86	14.13	5.420	9.13	6.11	9.65	4.920	1.23	16.8	15.0	3/4	16x25x1
030	22.0	43.0	17.0	1.5	25.00	16.50	2.47	15.00	5.420	9.13	6.11	9.65	4.920	1.23	16.8	15.0	3/4	16x25x1
036	22.0	54.5	19.0	1.5	30.15	22.85	2.86	16.13	6.470	9.13	7.50	10.28	5.970	1.21	18.8	17.0	3/4	18x30x1
042	22.0	54.5	19.0	1.5	30.15	22.85	2.86	16.13	5.270	10.45	6.46	11.30	4.770	1.22	18.8	17.0	3/4	18x30x1
048	25.0	54.5	21.0	1.5	34.60	18.40	2.86	18.52	7.250	10.45	7.46	11.36	6.750	2.16	20.8	19.0	1	20x34.5x5x1
060	25.0	54.5	21.0	1.5	34.60	18.40	2.86	18.52	6.320	11.76	6.81	12.50	5.820	1.68	20.8	19.0	1	20x34.5x5x1
070	25.0	65.0	21.0	1.5	48.10	15.40	2.86	18.52	6.320	11.76	6.81	12.50	5.820	1.68	20.8	19.0	1	20x24x1 (2)

NOTES:
1. All dimensions are within ± 0.125 inch.
2. All condensate drain connections are 3/4 in. FPT.
3. Unit sizes 015-070 can be field converted between end blow and straight through supply air configurations.
4. Specifications subject to change without notice.
5. The 1-in. filter rack extends 1.23-in. beyond the side of the unit. The 2-in. filter rack extends 2.89-in. beyond the side of the unit. The 2-in. filter rack is 4-sided with a filter access door on one end and can accept either a 1 in. or 2-in. filter.

Dimensions (cont)

50PCV UNIT

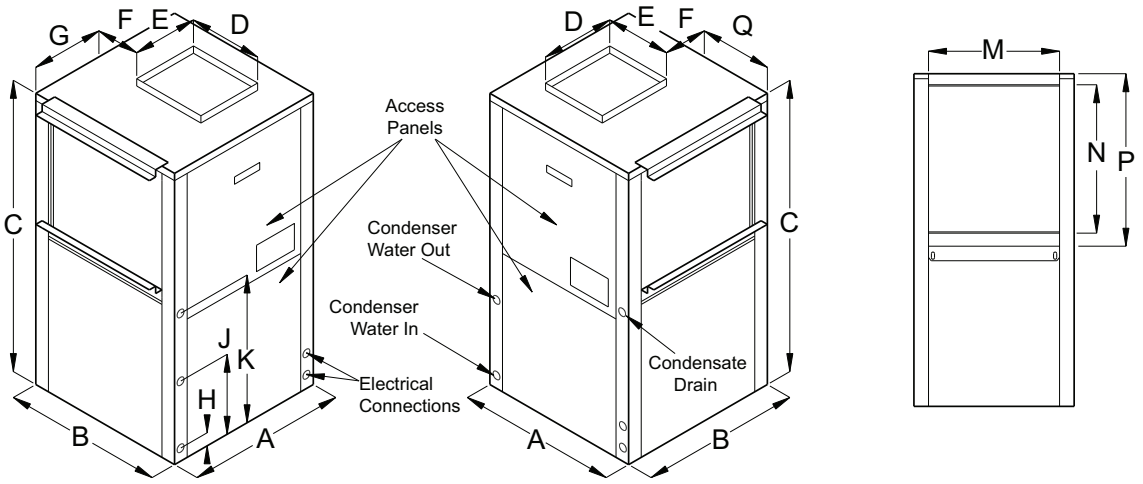

Left Hand Return (FLT) Right Hand Return (FRT) Return Air (Filter) View

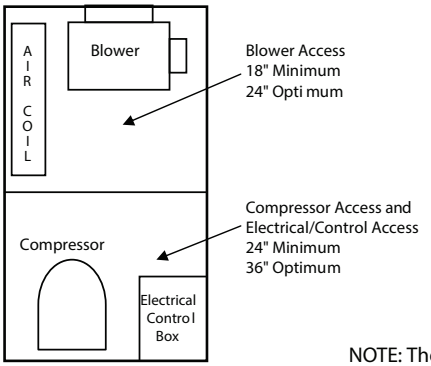

Front of Unit

Service Clearances

LEGEND

FLE — Front Water, Left Return, End Supply
FLS — Front Water, Left Return, Straight Through Supply
FRE — Front Water, Right Return, End Supply
FRS — Front Water, Right Return, Straight Through Supply
R/A — Return Air

NOTE: The local electric codes may require 36" or more clearance at the electrical control box.

50PCV007-070 UNITS

50PCV UNIT SIZE	A WIDTH	B DEPTH	C HEIGHT	D DISC. DEPTH	E DISC. WIDTH	F CABINET EDGE TO DISC.	G LEFT SIDE TO DISC.	H WATER INLET	J WATER OUTLET	K CONDEN-SATE DRAIN	M R/A DUCT WIDTH	N R/A DUCT FLANGE HEIGHT	P FILTER RACK HEIGHT	Q	CONDENSER WATER CONNECTIONS FPT	RECOMMENEDED REPLACEMENT NOMINAL FILTER SIZE
007	19.0	19.00	24.25	10.0	8.0	4.5	9.3	2.44	9.68	13.87	16.0	8.0	10.0	5.4	3/4	10X16X1
009	19.0	19.00	24.25	10.0	8.0	4.5	9.3	2.44	9.68	13.87	16.0	8.0	10.0	5.4	3/4	10X16X1
012	19.0	19.00	24.25	10.0	8.0	4.5	9.3	2.44	9.68	13.87	16.0	8.0	10.0	5.4	3/4	10x16x1
015	21.5	21.50	32.25	10.0	8.0	5.8	10.0	2.85	8.45	15.87	20.0	14.0	16.0	3.5	3/4	16x20x1
018	21.5	21.50	32.25	14.0	14.0	3.1	5.2	2.85	8.45	15.87	20.0	14.0	16.0	5.2	3/4	16x20x1
024	21.5	21.50	39.25	14.0	14.0	3.1	5.2	2.80	8.45	18.87	20.0	18.0	20.0	5.2	3/4	20x20x1
030	21.5	21.50	39.25	14.0	14.0	3.1	5.2	2.80	8.45	18.87	20.0	18.0	20.0	5.2	3/4	20x20x1
036	21.5	26.00	43.25	16.0	14.0	4.0	5.0	2.75	10.77	18.87	24.0	22.0	24.0	5.0	3/4	24x24x1
042	21.5	26.00	43.25	16.0	14.0	4.0	5.0	2.75	10.77	18.87	24.0	22.0	24.0	5.0	3/4	24x24x1
048	24.0	32.50	45.25	18.0	14.0	7.0	6.2	3.26	13.20	20.87	30.0	22.0	24.0	6.2	1	24x30x1
060	24.0	32.50	45.25	18.0	14.0	7.0	6.2	3.26	13.20	20.87	30.0	22.0	24.0	6.2	1	24x30x1
070	26.0	33.25	58.25	18.0	16.0	7.8	7.2	2.92	13.36	25.87	30.0	30.0	32.0	7.2	1	16x30x1 (2)

NOTES:
1. All dimensions are within ± 0.125 inch.
2. All condensate drain connections are 3/4 in. FPT.
3. Unit sizes 015-070 can be field converted between end blow and straight through supply air configurations.
4. Specifications subject to change without notice.
5. The 1-in. filter rack extends 1.23-in. beyond the side of the unit. The 2-in. filter rack extends 2.89-in. beyond the side of the unit. The 2-in. filter rack is 4 sided with a filter access door on one end and can accept either a 1-in. or 2-in. filter.

50PCD UNIT

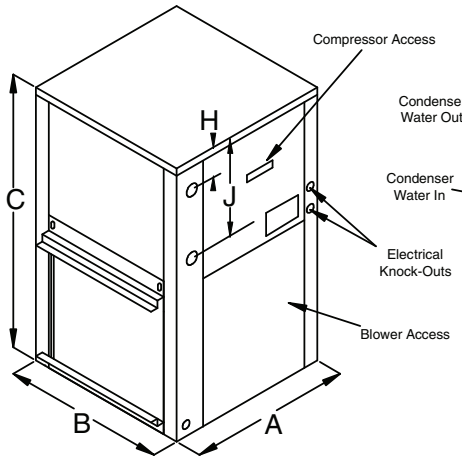

Left Hand Return (FLT)

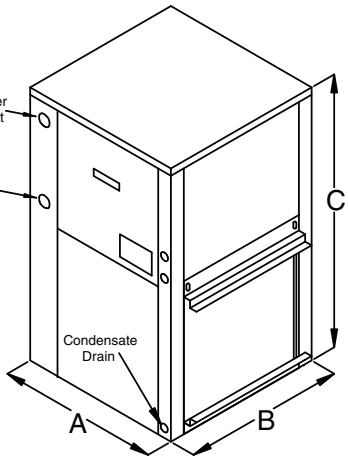

Right Hand Return (FRT)

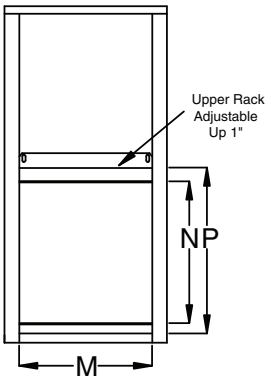

Return Air (Filter) View

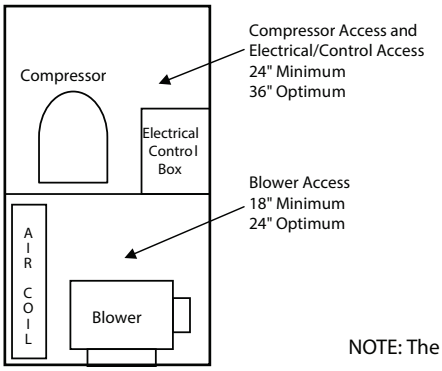

Front of Unit
Service Clearances

LEGEND

FLE — Front Water, Left Return, End Supply
FLS — Front Water, Left Return, Straight Through Supply
FRE — Front Water, Right Return, End Supply
FRS — Front Water, Right Return, Straight Through Supply
R/A — Return Air

NOTE: The local electric codes may require 36" or more clearance at the electrical control box.

→ **50PCD015-070 UNITS**

50PCD UNIT SIZE	A WIDTH	B DEPTH	C HEIGHT	D DISC. DEPTH	E DISC. WIDTH	F CABINET EDGE TO DISC.	G LEFT SIDE TO DISC.	H WATER INLET	J WATER OUTLET	K CONDEN SATE DRAIN	M R/A DUCT WIDTH	N R/A DUCT FLANGE HEIGHT	P FILTER RACK HEIGHT	Q	CONDENSER WATER CONNECTIONS FPT	RECOMMENEDED REPLACEMENT NOMINAL FILTER SIZE
015	21.5	21.50	32.25	4.1	6.4	8.7	7.6	19.9	25.5	1.0	20.0	14.0	16.0	7.6	3/4	16x20x1
018	21.5	21.50	32.25	9.7	9.0	5.9	6.8	19.9	25.5	1.0	20.0	14.0	16.0	6.7	3/4	16x20x1
024	21.5	21.50	39.25	9.7	9.0	5.9	6.8	23.9	36.0	1.0	20.0	18.0	20.0	6.7	3/4	20x20x1
030	21.5	21.50	39.25	9.7	9.0	5.9	6.8	23.9	36.0	1.0	20.0	18.0	20.0	6.7	3/4	20x20x1
036	21.5	26.00	43.25	10.3	9.2	7.8	6.2	27.8	35.8	1.0	24.0	22.0	24.0	6.2	3/4	24x24x1
042	21.5	26.00	43.25	11.3	10.5	7.4	5.9	27.8	35.8	1.0	24.0	22.0	24.0	5.9	3/4	24x24x1
048	24.0	32.50	45.25	11.4	10.5	10.5	6.7	28.3	38.3	1.0	30.0	22.0	24.0	6.7	1	24x30x1
060	24.0	32.50	45.25	12.5	11.7	10.0	6.1	28.3	38.3	1.0	30.0	22.0	24.0	6.1	1	24x30x1
070	26.0	33.25	58.25	12.5	11.7	10.3	7.2	36.0	46.4	1.0	30.0	30.0	32.0	7.1	1	16x30x1 (2)

NOTES:
1. All dimensions are within ± 0.125 inch.
2. All condensate drain connections are 3/4 in. FPT.
3. Unit sizes 015-070 can be field converted between end blow and straight through supply air configurations.
4. Specifications subject to change without notice.
5. The 1-in. filter rack extends 1.23-in. beyond the side of the unit. The 2-in. filter rack extends 2.89-in. beyond the side of the unit. The 2-in. filter rack is 4 sided with a filter access door on one end and can accept either a 1-in. or 2-in. filter.

Dimensions (cont)

50PCH007-070 CORNER WEIGHTS

UNIT SIZE	TOTAL (lbs)	LEFT HAND EVAPORATOR				RIGHT HAND EVAPORATOR			
		LEFT FRONT*	RIGHT FRONT*	LEFT BACK	RIGHT BACK	LEFT FRONT*	RIGHT FRONT*	LEFT BACK	RIGHT BACK
007	98	28	21	25	24	21	28	24	25
009	103	29	23	26	25	23	29	25	26
012	105	29	24	26	26	24	29	26	26
015	127	36	28	34	29	28	36	29	34
018	177	57	36	48	37	36	57	37	48
024	181	58	37	48	38	37	58	38	48
030	194	61	41	52	41	41	61	41	52
036	237	71	49	66	52	49	71	52	66
042	231	70	47	64	50	47	70	50	64
048	268	87	60	62	60	60	87	60	62
060	288	88	65	69	66	65	88	66	69
070	316	98	72	76	70	72	98	70	76

* Front is counter box end.

→

50PCH, PCV007 — 300 CFM NOMINAL AIRFLOW

COOLING									HEATING					
EWT (F)	Water Flow (gpm)	Pressure Drop psi (FOH)	Entering Air Temp (db/wb) (F)	Total Capacity (MBtuh)	Sensible Capacity (MBtuh)	Heat of Rejection (MBtuh)	Power Input (kW)	EER	EWT (F)	Entering Air Temp (F)	Total Capacity (MBtuh)	Heat of Absorption (MBtuh)	Power Input (kW)	COP
50	1	0.3 (0.6)	75/63	7.0	6.3	8.3	0.42	16.9	30	60	4.5	3.2	0.42	3.1
			80/67	7.5	6.5	8.8	0.42	18.1		70	4.4	3.0	0.45	2.8
			85/71	7.9	6.7	9.2	0.42	19.0		80	4.3	2.8	0.48	2.6
	2	1.2 (2.77)	75/63	7.5	6.5	8.6	0.42	20.3		60	4.9	3.6	0.43	3.3
			80/67	8.0	6.7	9.1	0.37	21.9		70	4.8	3.4	0.46	3.0
			85/71	8.5	6.9	9.7	0.37	23.5		80	4.6	3.1	0.49	2.7
	3	2.5 (5.77)	75/63	7.6	6.5	8.8	0.36	21.6		60	5.1	3.8	0.43	3.4
			80/67	8.1	6.8	9.3	0.35	23.4		70	5.0	3.5	0.46	3.2
			85/71	8.7	7.0	9.8	0.35	25.5		80	4.8	3.2	0.49	2.8
60	1	0.3 (0.6)	75/63	6.6	6.1	8.0	0.45	14.6	40	60	5.3	3.9	0.43	3.6
			80/67	7.1	6.3	8.5	0.46	15.7		70	5.1	3.7	0.46	3.2
			85/71	7.5	6.6	8.9	0.46	16.5		80	5.0	3.4	0.50	2.9
	2	1.2 (2.77)	75/63	7.1	6.3	8.3	0.41	17.4		60	5.8	4.4	0.44	3.9
			80/67	7.5	6.5	8.8	0.41	18.4		70	5.6	4.1	0.47	3.5
			85/71	8.0	6.8	9.3	0.41	19.8		80	5.4	3.8	0.50	3.1
	3	2.4 (5.54)	75/63	7.2	6.4	8.5	0.40	18.3		60	6.0	4.6	0.44	4.0
			80/67	7.7	6.6	9.0	0.39	19.8		70	5.8	4.3	0.47	3.6
			85/71	8.2	6.8	9.5	0.39	21.3		80	5.6	4.0	0.51	3.2
70	1	0.3 (0.6)	75/63	6.2	6.0	7.7	0.49	12.7	50	60	6.0	4.7	0.44	4.0
			80/67	6.7	6.2	8.2	0.50	13.6		70	5.9	4.4	0.47	3.6
			85/71	7.1	6.5	8.6	0.50	14.3		80	5.7	4.1	0.51	3.3
	2	1.1 (2.54)	75/63	6.6	6.1	8.0	0.45	14.7		60	6.7	5.3	0.44	4.4
			80/67	7.1	6.4	8.5	0.45	15.8		70	6.5	4.9	0.48	4.0
			85/71	7.6	6.6	9.0	0.45	17.0		80	6.3	4.6	0.52	3.6
	3	2.3 (5.31)	75/63	6.8	6.2	8.1	0.44	15.6		60	6.9	5.5	0.44	4.5
			80/67	7.3	6.4	8.6	0.44	16.8		70	6.7	5.2	0.48	4.1
			85/71	7.8	6.7	9.1	0.43	18.1		80	6.5	4.8	0.52	3.7
80	1	0.3 (0.6)	75/63	5.9	5.6	7.4	0.53	11.2	60	60	6.9	5.5	0.44	4.5
			80/67	6.3	6.1	7.8	0.54	11.8		70	6.7	5.2	0.48	4.1
			85/71	6.7	6.3	8.3	0.54	12.5		80	6.5	4.9	0.52	3.7
	2	1.1 (2.54)	75/63	6.2	6.0	7.7	0.50	12.6		60	7.6	6.2	0.45	5.0
			80/67	6.7	6.2	8.2	0.50	13.6		70	7.4	5.8	0.49	4.4
			85/71	7.1	6.5	8.6	0.50	14.4		80	7.1	5.4	0.53	3.9
	3	2.3 (5.31)	75/63	6.4	6.0	7.8	0.48	13.4		60	7.9	6.5	0.45	5.2
			80/67	6.8	6.3	8.3	0.48	14.2		70	7.7	6.1	0.49	4.6
			85/71	7.3	6.5	8.7	0.48	15.3		80	7.4	5.7	0.53	4.1
85	1	0.3 (0.6)	75/63	5.7	5.5	7.3	0.55	10.4	70	60	7.7	6.3	0.45	5.0
			80/67	6.1	5.8	7.7	0.56	11.0		70	7.6	6.0	0.49	4.6
			85/71	6.4	6.3	8.1	0.56	11.5		80	7.4	5.6	0.53	4.1
	2	1.1 (2.54)	75/63	6.0	5.7	7.6	0.52	11.7		60	8.6	7.2	0.45	5.6
			80/67	6.4	6.1	8.0	0.52	12.4		70	8.3	6.8	0.49	4.9
			85/71	6.9	6.4	8.4	0.52	13.4		80	8.1	6.3	0.53	4.4
	3	2.2 (5.07)	75/63	6.1	5.9	7.6	0.50	12.2		60	9.0	7.6	0.45	5.9
			80/67	6.6	6.2	8.1	0.50	13.2		70	8.7	7.1	0.49	5.2
			85/71	7.0	6.4	8.6	0.50	14.0		80	8.4	6.6	0.53	4.6
90	1	0.3 (0.6)	75/63	5.5	5.4	7.1	0.57	9.7	80	60	8.6	7.2	0.45	5.6
			80/67	5.9	5.7	7.5	0.58	10.3		70	8.4	6.9	0.49	5.0
			85/71	6.2	6.0	8.0	0.58	10.7		80	8.2	6.5	0.53	4.5
	2	1.1 (2.54)	75/63	5.8	5.6	7.4	0.54	10.8		60	9.6	8.2	0.45	6.3
			80/67	6.2	6.0	7.8	0.54	11.6		70	9.3	7.7	0.49	5.5
			85/71	6.6	6.3	8.3	0.54	12.3		80	9.0	7.3	0.54	4.9
	3	2.2 (5.07)	75/63	5.9	5.7	7.5	0.53	11.3		60	10.0	8.6	0.45	6.5
			80/67	6.3	6.1	7.9	0.53	12.0		70	9.7	8.1	0.49	5.8
			85/71	6.8	6.4	8.4	0.53	13.0		80	9.3	7.6	0.54	5.0
100	1	0.3 (0.6)	75/63	5.1	5.1	6.9	0.62	8.4	Operation Not Recommended					
			80/67	5.4	5.4	7.2	0.62	8.8						
			85/71	5.8	5.8	7.6	0.63	9.3						
	2	1 (2.31)	75/63	5.4	5.4	7.1	0.58	9.3						
			80/67	5.8	5.7	7.5	0.59	10.0						
			85/71	6.2	5.9	7.9	0.59	10.6						
	3	2.1 (4.84)	75/63	5.5	5.4	7.1	0.57	9.7						
			80/67	5.9	5.7	7.6	0.58	10.3						
			85/71	6.3	6.0	8.0	0.58	11.0						
110	1	0.3 (0.6)	75/63	4.7	4.7	6.6	0.66	7.2						
			80/67	5.0	5.0	7.0	0.67	7.5						
			85/71	5.4	5.4	7.3	0.68	8.0						
	2	1 (2.31)	75/63	5.0	5.0	6.8	0.63	8.0						
			80/67	5.3	5.3	7.2	0.64	8.4						
			85/71	5.7	5.7	7.6	0.64	9.0						
	3	2.1 (4.84)	75/63	5.1	5.1	6.8	0.62	8.3						
			80/67	5.4	5.4	7.2	0.62	8.7						
			85/71	5.8	5.8	7.6	0.63	9.3						

NOTE: See Legend and Notes on page 25.

Performance data (cont)

→ **50PCH, PCV009 — 350 CFM NOMINAL AIRFLOW**

COOLING									HEATING					
EWT (F)	Water Flow (gpm)	Pressure Drop psi (FOH)	Entering Air Temp (db/wb) (F)	Total Capacity (MBtuh)	Sensible Capacity (MBtuh)	Heat of Rejection (MBtuh)	Power Input (kW)	EER	EWT (F)	Entering Air Temp (F)	Total Capacity (MBtuh)	Heat of Absorption (MBtuh)	Power Input (kW)	COP
50	1	0.5 (1.1)	75/63	9.1	7.7	10.6	0.52	17.6	30	60	5.8	4.2	0.54	3.1
			80/67	9.6	8.0	11.2	0.52	18.6		70	5.7	3.9	0.58	2.9
			85/71	10.2	8.2	11.8	0.52	19.8		80	5.6	3.7	0.63	2.6
	2	1.8 (4.15)	75/63	9.6	8.0	11.0	0.44	21.6		60	6.4	4.7	0.55	3.4
			80/67	10.3	8.2	11.7	0.44	23.6		70	6.3	4.4	0.59	3.1
			85/71	10.9	8.5	12.3	0.43	25.4		80	6.1	4.1	0.64	2.8
	3	3.8 (8.77)	75/63	9.8	8.0	11.1	0.42	23.5		60	6.7	5.0	0.55	3.6
			80/67	10.5	8.3	11.8	0.41	25.7		70	6.5	4.6	0.60	3.2
			85/71	11.2	8.6	12.5	0.40	28.2		80	6.4	4.3	0.64	2.9
60	1	0.5 (1.1)	75/63	8.6	7.5	10.4	0.57	15.1	40	60	6.8	5.1	0.55	3.6
			80/67	9.2	7.8	10.9	0.57	16.1		70	6.7	4.8	0.60	3.3
			85/71	9.7	8.1	11.5	0.57	16.9		80	6.5	4.5	0.65	2.9
	2	1.8 (4.15)	75/63	9.2	7.8	10.7	0.50	18.3		60	7.5	5.7	0.56	3.9
			80/67	9.8	8.0	11.3	0.50	19.7		70	7.3	5.4	0.61	3.5
			85/71	10.4	8.3	11.9	0.49	21.2		80	7.1	5.0	0.66	3.2
	3	3.6 (8.30)	75/63	9.4	7.8	10.8	0.48	19.7		60	7.8	6.0	0.57	4.1
			80/67	10.0	8.1	11.5	0.47	21.2		70	7.6	5.6	0.61	3.6
			85/71	10.6	8.4	12.1	0.46	22.9		80	7.4	5.2	0.67	3.3
70	1	0.5 (1.1)	75/63	8.2	7.2	10.0	0.62	13.1	50	60	7.7	6.0	0.57	4.0
			80/67	8.7	7.6	10.6	0.63	13.8		70	7.6	5.7	0.61	3.6
			85/71	9.3	7.9	11.2	0.63	14.7		80	7.5	5.3	0.67	3.3
	2	1.7 (3.92)	75/63	8.7	7.5	10.4	0.56	15.5		60	8.6	6.8	0.57	4.4
			80/67	9.3	7.9	11.0	0.56	16.6		70	8.4	6.4	0.62	4.0
			85/71	9.9	8.1	11.6	0.56	17.8		80	8.2	6.0	0.68	3.6
	3	3.5 (8.07)	75/63	8.9	7.6	10.5	0.54	16.5		60	9.0	7.2	0.57	4.6
			80/67	9.5	7.9	11.1	0.53	17.8		70	8.7	6.7	0.63	4.1
			85/71	10.1	8.2	11.8	0.53	19.1		80	8.5	6.3	0.68	3.7
80	1	0.5 (1.1)	75/63	7.7	7.0	9.7	0.68	11.3	60	60	8.8	7.0	0.57	4.5
			80/67	8.2	7.3	10.3	0.69	11.9		70	8.6	6.6	0.63	4.0
			85/71	8.7	7.5	10.8	0.69	12.6		80	8.5	6.2	0.68	3.7
	2	1.6 (3.69)	75/63	8.2	7.2	10.1	0.62	13.2		60	9.8	8.0	0.58	5.0
			80/67	8.8	7.6	10.6	0.62	14.1		70	9.5	7.5	0.63	4.4
			85/71	9.3	7.9	11.2	0.62	15.0		80	9.3	7.0	0.69	3.9
	3	3.4 (7.84)	75/63	8.4	7.2	10.2	0.60	14.0		60	10.2	8.4	0.58	5.2
			80/67	9.0	7.7	10.8	0.60	15.0		70	9.9	7.8	0.64	4.6
			85/71	9.6	8.0	11.4	0.60	16.1		80	9.6	7.3	0.70	4.1
85	1	0.5 (1.1)	75/63	7.5	6.9	9.6	0.71	10.6	70	60	9.8	8.0	0.58	5.0
			80/67	8.0	7.2	10.1	0.72	11.2		70	9.6	7.6	0.63	4.4
			85/71	8.5	7.4	10.7	0.72	11.8		80	9.4	7.2	0.69	4.0
	2	1.6 (3.69)	75/63	8.0	7.1	9.9	0.65	12.2		60	11.0	9.2	0.58	5.6
			80/67	8.5	7.3	10.5	0.65	13.0		70	10.7	8.6	0.64	4.9
			85/71	9.1	7.8	11.0	0.65	13.9		80	10.4	8.1	0.70	4.3
	3	3.3 (7.61)	75/63	8.1	7.1	10.0	0.63	12.8		60	11.6	9.7	0.58	5.9
			80/67	8.7	7.4	10.6	0.63	13.7		70	11.1	9.0	0.64	5.1
			85/71	9.3	7.9	11.2	0.63	14.8		80	10.8	8.5	0.71	4.5
90	1	0.5 (1.1)	75/63	7.3	6.7	9.4	0.74	9.9	80	60	10.9	9.1	0.58	5.5
			80/67	7.8	7.0	10.0	0.75	10.4		70	10.7	8.6	0.64	4.9
			85/71	8.2	7.3	10.5	0.75	10.9		80	10.4	8.2	0.70	4.3
	2	1.6 (3.69)	75/63	7.7	7.0	9.7	0.68	11.2		60	12.3	10.5	0.58	6.2
			80/67	8.2	7.3	10.3	0.69	11.9		70	11.8	9.8	0.65	5.4
			85/71	8.8	7.5	10.8	0.69	12.8		80	11.5	9.3	0.71	4.7
	3	3.3 (7.61)	75/63	7.8	7.0	9.8	0.67	11.7		60	12.9	11.1	0.58	6.5
			80/67	8.4	7.3	10.4	0.67	12.6		70	12.3	10.2	0.65	5.6
			85/71	9.0	7.8	11.0	0.66	13.6		80	12.0	9.8	0.72	4.9
100	1	0.4 (0.9)	75/63	6.8	6.5	9.1	0.80	8.5	Operation Not Recommended					
			80/67	7.2	6.8	9.6	0.81	8.9						
			85/71	7.7	7.1	10.1	0.82	9.4						
	2	1.5 (3.47)	75/63	7.2	6.7	9.4	0.75	9.6						
			80/67	7.7	7.1	9.9	0.75	10.2						
			85/71	8.2	7.3	10.5	0.75	10.9						
	3	3.2 (7.39)	75/63	7.3	6.8	9.5	0.73	10.0						
			80/67	7.9	7.1	10.0	0.73	10.8						
			85/71	8.4	7.3	10.6	0.73	11.4						
110	1	0.4 (0.9)	75/63	6.3	6.3	8.8	0.86	7.3						
			80/67	6.7	6.6	9.3	0.87	7.7						
			85/71	7.2	6.9	9.8	0.88	8.1						
	2	1.5 (3.47)	75/63	6.7	6.5	9.0	0.82	8.2						
			80/67	7.1	6.8	9.6	0.82	8.6						
			85/71	7.6	7.1	10.1	0.83	9.2						
	3	3.1 (7.15)	75/63	6.8	6.6	9.1	0.80	8.5						
			80/67	7.3	6.9	9.6	0.80	9.1						
			85/71	7.8	7.2	10.2	0.81	9.7						

NOTE: See Legend and Notes on page 25.

→

50PCH, PCV012 — 400 CFM NOMINAL AIRFLOW

COOLING									HEATING					
EWT (F)	Water Flow (gpm)	Pressure Drop psi (FOH)	Entering Air Temp (db/wb) (F)	Total Capacity (MBtuh)	Sensible Capacity (MBtuh)	Heat of Rejection (MBtuh)	Power Input (kW)	EER	EWT (F)	Entering Air Temp (F)	Total Capacity (MBtuh)	Heat of Absorption (MBtuh)	Power Input (kW)	COP
50	1.5	1.1 (2.54)	75/63	12.5	9.7	14.6	0.67	18.8	30	60	8.2	5.8	0.75	3.2
			80/67	13.3	10.0	15.4	0.67	19.9		70	8.0	5.5	0.80	2.9
			85/71	14.1	10.2	16.3	0.67	21.0		80	7.9	5.1	0.86	2.7
	2.5	2.8 (6.46)	75/63	12.9	9.9	14.9	0.61	21.3		60	8.6	6.2	0.75	3.3
			80/67	13.8	10.2	15.8	0.60	22.9		70	8.4	5.9	0.81	3.0
			85/71	14.7	10.4	16.7	0.60	24.6		80	8.3	5.5	0.87	2.8
	3.5	5.1 (11.7)	75/63	13.1	10.0	15.0	0.58	22.6		60	9.0	6.5	0.76	3.5
			80/67	14.0	10.3	15.9	0.57	24.4		70	8.7	6.1	0.82	3.1
			85/71	15.0	10.6	16.9	0.57	26.6		80	8.5	5.6	0.87	2.8
60	1.5	1.1 (2.54)	75/63	11.9	9.4	14.2	0.74	16.1	40	60	9.4	6.9	0.76	3.6
			80/67	12.7	9.7	15.0	0.75	17.1		70	9.2	6.5	0.83	3.3
			85/71	13.5	10.0	15.9	0.75	18.0		80	9.0	6.1	0.89	3.0
	2.5	2.7 (6.23)	75/63	12.3	9.6	14.5	0.69	18.0		60	9.9	7.5	0.77	3.8
			80/67	13.2	9.9	15.4	0.68	19.4		70	9.7	7.0	0.84	3.4
			85/71	14.1	10.2	16.3	0.68	20.8		80	9.5	6.6	0.90	3.1
	3.5	4.9 (11.2)	75/63	12.5	9.7	14.6	0.66	18.9		60	10.3	7.8	0.77	3.9
			80/67	13.4	10.0	15.5	0.66	20.5		70	10.0	7.3	0.84	3.5
			85/71	14.3	10.3	16.4	0.65	22.0		80	9.7	6.8	0.91	3.1
70	1.5	1 (2.3)	75/63	11.3	9.2	13.8	0.82	13.9	50	60	10.6	8.1	0.78	4.0
			80/67	12.0	9.5	14.6	0.82	14.6		70	10.4	7.7	0.85	3.6
			85/71	12.8	9.8	15.4	0.83	15.4		80	10.2	7.2	0.92	3.2
	2.5	2.6 (5.9)	75/63	11.7	9.4	14.1	0.76	15.3		60	11.4	8.8	0.79	4.2
			80/67	12.5	9.7	14.9	0.77	16.4		70	11.1	8.3	0.86	3.8
			85/71	13.3	10.0	15.8	0.76	17.4		80	10.9	7.8	0.93	3.4
	3.5	4.8 (11.0)	75/63	11.8	9.4	14.2	0.75	15.9		60	11.7	9.2	0.79	4.3
			80/67	12.7	9.8	15.1	0.74	17.2		70	11.4	8.6	0.86	3.9
			85/71	13.6	10.0	15.9	0.74	18.4		80	11.2	8.1	0.94	3.5
80	1.5	1 (2.3)	75/63	10.7	8.9	13.5	0.89	12.0	60	60	12.0	9.4	0.79	4.4
			80/67	11.4	9.2	14.2	0.90	12.6		70	11.8	8.9	0.87	4.0
			85/71	12.1	9.5	15.0	0.91	13.3		80	11.5	8.4	0.95	3.6
	2.5	2.5 (5.7)	75/63	11.1	9.1	13.7	0.85	13.1		60	12.9	10.3	0.80	4.7
			80/67	11.8	9.4	14.5	0.85	13.9		70	12.5	9.7	0.88	4.2
			85/71	12.6	9.7	15.3	0.85	14.8		80	12.2	9.1	0.96	3.7
	3.5	4.6 (10.6)	75/63	11.2	9.2	13.8	0.83	13.5		60	13.3	10.7	0.81	4.8
			80/67	12.0	9.4	14.6	0.83	14.5		70	12.9	10.1	0.89	4.3
			85/71	12.8	9.7	15.5	0.83	15.5		80	12.6	9.4	0.97	3.8
85	1.5	1 (2.3)	75/63	10.4	8.8	13.3	0.93	11.2	70	60	13.4	10.8	0.81	4.9
			80/67	11.1	9.1	14.0	0.94	11.8		70	13.1	10.2	0.89	4.3
			85/71	11.8	9.4	14.8	0.95	12.4		80	12.8	9.7	0.97	3.9
	2.5	2.5 (5.7)	75/63	10.7	9.0	13.5	0.89	12.1		60	14.4	11.8	0.82	5.2
			80/67	11.5	9.3	14.3	0.89	12.9		70	14.0	11.1	0.90	4.5
			85/71	12.2	9.6	15.1	0.90	13.6		80	13.7	10.4	0.99	4.1
	3.5	4.5 (10.3)	75/63	10.9	9.0	13.5	0.87	12.6		60	14.9	12.3	0.82	5.3
			80/67	11.6	9.3	14.4	0.87	13.3		70	14.5	11.5	0.91	4.7
			85/71	12.4	9.6	15.2	0.88	14.2		80	14.1	10.8	1.00	4.1
90	1.5	1 (2.3)	75/63	10.1	8.7	13.1	0.98	10.4	80	60	14.9	12.2	0.82	5.3
			80/67	10.7	9.0	13.8	0.99	10.9		70	14.5	11.6	0.91	4.7
			85/71	11.5	9.3	14.6	1.00	11.6		80	14.2	11.0	1.00	4.2
	2.5	2.4 (5.5)	75/63	10.4	8.8	13.3	0.93	11.2		60	16.0	13.3	0.83	5.6
			80/67	11.1	9.1	14.1	0.94	11.9		70	15.6	12.6	0.93	4.9
			85/71	11.9	9.4	14.8	0.94	12.6		80	15.2	11.9	1.02	4.4
	3.5	4.5 (10.3)	75/63	10.5	8.8	13.4	0.92	11.4		60	16.6	13.9	0.84	5.8
			80/67	11.3	9.2	14.1	0.91	12.4		70	16.1	13.1	0.93	5.1
			85/71	12.1	9.5	14.9	0.92	13.2		80	15.6	12.3	1.03	4.5
100	1.5	0.9 (2.0)	75/63	9.4	8.4	12.6	1.06	8.9	Operation Not Recommended					
			80/67	10.1	8.8	13.4	1.07	9.4						
			85/71	10.8	9.0	14.1	1.08	10.0						
	2.5	2.4 (5.5)	75/63	9.7	8.5	12.8	1.02	9.5						
			80/67	10.4	8.8	13.6	1.03	10.1						
			85/71	11.1	9.2	14.3	1.03	10.7						
	3.5	4.3 (9.9)	75/63	9.8	8.6	12.9	1.01	9.8						
			80/67	10.5	8.9	13.6	1.01	10.5						
			85/71	11.3	9.3	14.4	1.01	11.2						
110	1.5	0.9 (2.0)	75/63	8.8	8.1	12.2	1.15	7.7						
			80/67	9.4	8.5	12.9	1.16	8.1						
			85/71	10.0	8.8	13.6	1.17	8.6						
	2.5	2.3 (5.3)	75/63	9.0	8.3	12.4	1.11	8.1						
			80/67	9.7	8.5	13.1	1.12	8.7						
			85/71	10.4	8.9	13.9	1.13	9.2						
	3.5	4.2 (9.6)	75/63	9.1	8.3	12.5	1.10	8.3						
			80/67	9.8	8.7	13.2	1.10	8.9						
			85/71	10.5	9.0	13.9	1.11	9.5						

NOTE: See Legend and Notes on page 25.

Performance data (cont)

50PCH, PCV, PCD015 — 500 CFM NOMINAL AIRFLOW

COOLING									HEATING					
EWT (F)	Water Flow (gpm)	Pressure Drop psi (FOH)	Entering Air Temp (db/wb) (F)	Total Capacity (MBtuh)	Sensible Capacity (MBtuh)	Heat of Rejection (MBtuh)	Power Input (kW)	EER	EWT (F)	Entering Air Temp (F)	Total Capacity (MBtuh)	Heat of Absorption (MBtuh)	Power Input (kW)	COP
50	2	2 (4.62)	75/63	15.2	11.5	17.7	0.77	19.8	30	60	10.1	7.1	0.93	3.2
			80/67	16.3	11.9	18.7	0.76	21.5		70	9.9	6.7	1.00	2.9
			85/71	17.3	12.3	19.8	0.75	23.2		80	9.9	6.2	1.08	2.7
	3	4.2 (9.6)	75/63	15.6	11.7	17.9	0.71	21.9		60	10.5	7.5	0.94	3.3
			80/67	16.7	12.1	19.0	0.70	24.0		70	10.3	7.1	1.01	3.0
			85/71	17.9	12.5	20.1	0.68	26.4		80	10.3	6.5	1.09	2.8
	4.5	8.6 (19.8)	75/63	15.9	11.9	18.1	0.67	23.6		60	10.8	7.8	0.94	3.4
			80/67	17.1	12.3	19.2	0.65	26.2		70	10.6	7.3	1.02	3.0
			85/71	18.3	12.7	20.4	0.63	29.0		80	10.6	6.7	1.10	2.8
60	2	1.9 (4.3)	75/63	14.5	11.2	17.3	0.86	16.8	40	60	11.6	8.5	0.96	3.6
			80/67	15.5	11.6	18.3	0.86	18.1		70	11.3	8	1.04	3.2
			85/71	16.6	12.0	19.3	0.85	19.6		80	11.1	7.5	1.12	2.9
	3	4 (9.2)	75/63	14.9	11.4	17.5	0.81	18.4		60	12.0	9.0	0.96	3.6
			80/67	16.0	11.8	18.6	0.80	20.1		70	11.8	8.4	1.05	3.3
			85/71	17.1	12.2	19.6	0.78	21.9		80	11.6	7.9	1.13	3.0
	4.5	8.3 (19.1)	75/63	15.2	11.5	17.7	0.77	19.6		60	12.5	9.4	0.97	3.8
			80/67	16.3	11.9	18.7	0.76	21.5		70	12.2	8.8	1.06	3.4
			85/71	17.4	12.3	19.8	0.74	23.6		80	12.1	8.0	1.14	3.1
70	2	1.9 (4.3)	75/63	13.8	11.0	16.8	0.96	14.4	50	60	13.2	9.9	0.98	3.9
			80/67	14.8	11.3	17.8	0.96	15.5		70	13.2	9.3	1.07	3.6
			85/71	15.8	11.7	18.8	0.95	16.6		80	12.7	8.7	1.16	3.2
	3	3.9 (8.9)	75/63	14.2	11.1	17.0	0.91	15.6		60	13.7	10.7	0.99	4.0
			80/67	15.2	11.5	18.1	0.90	16.9		70	13.4	10.0	1.08	3.7
			85/71	16.3	11.9	19.1	0.89	18.3		80	13.1	9.3	1.17	3.3
	4.5	8.1 (18.6)	75/63	14.4	11.2	17.2	0.88	16.4		60	14.2	11.1	1.00	4.2
			80/67	15.5	11.6	18.2	0.86	18.0		70	13.9	10.3	1.08	3.8
			85/71	16.6	12.0	19.3	0.85	19.6		80	13.5	9.7	1.17	3.4
80	2	1.8 (4.1)	75/63	13.0	10.6	16.4	1.06	12.3	60	60	14.8	11.6	1.00	4.3
			80/67	14.0	11.1	17.3	1.06	13.2		70	14.5	11.0	1.09	3.9
			85/71	14.9	11.4	18.3	1.06	14.1		80	14.1	10.3	1.18	3.5
	3	3.8 (8.7)	75/63	13.4	10.7	16.6	1.01	13.2		60	15.8	12.2	1.01	4.6
			80/67	14.4	11.2	17.5	1.01	14.3		70	15.4	11.4	1.10	4.1
			85/71	15.4	11.6	18.6	1.00	15.4		80	14.8	10.9	1.19	3.6
	4.5	7.8 (17.9)	75/63	13.6	10.9	16.7	0.98	13.8		60	16.4	12.7	1.01	4.7
			80/67	14.6	11.2	17.7	0.97	15.0		70	16.0	11.8	1.11	4.2
			85/71	15.7	11.7	18.7	0.96	16.3		80	15.3	11.3	1.20	3.7
85	2	1.8 (4.1)	75/63	12.7	10.4	16.1	1.11	11.4	70	60	16.5	13.4	1.02	4.8
			80/67	13.6	10.9	17.0	1.11	12.2		70	16.5	12.4	1.11	4.4
			85/71	14.5	11.3	18.0	1.11	13.1		80	16.0	11.7	1.21	3.9
	3	3.7 (8.5)	75/63	13.0	10.6	16.3	1.07	12.2		60	17.7	14.0	1.02	5.1
			80/67	13.9	11.1	17.3	1.06	13.1		70	17.5	13.0	1.12	4.6
			85/71	15.0	11.4	18.3	1.05	14.2		80	17.1	12.1	1.22	4.1
	4.5	7.7 (17.7)	75/63	13.2	10.7	16.4	1.04	12.7		60	18.0	14.8	1.02	5.2
			80/67	14.2	11.1	17.4	1.03	13.8		70	17.9	13.6	1.13	4.7
			85/71	15.2	11.5	18.5	1.02	14.9		80	17.4	12.7	1.23	4.2
90	2	1.8 (4.1)	75/63	12.3	10.3	15.9	1.16	10.6	80	60	18.4	14.9	1.03	5.3
			80/67	13.2	10.7	16.8	1.16	11.3		70	18.2	14.1	1.13	4.7
			85/71	14.1	11.1	17.8	1.16	12.1		80	18.0	13.0	1.23	4.3
	3	3.6 (8.3)	75/63	12.6	10.4	16.1	1.12	11.3		60	19.6	15.9	1.03	5.6
			80/67	13.5	10.9	17.0	1.12	12.1		70	19.1	15.0	1.14	4.9
			85/71	14.5	11.3	18.0	1.11	13.1		80	18.9	13.9	1.24	4.5
	4.5	7.6 (17.5)	75/63	12.8	10.6	16.2	1.09	11.7		60	20.4	16.5	1.03	5.8
			80/67	13.8	10.9	17.2	1.09	12.7		70	19.8	15.6	1.14	5.1
			85/71	14.8	11.4	18.2	1.08	13.8		80	19.5	14.4	1.25	4.6
100	2	1.7 (3.9)	75/63	11.5	9.9	15.4	1.27	9.1	Operation Not Recommended					
			80/67	12.3	10.4	16.3	1.27	9.7						
			85/71	13.2	10.8	17.2	1.27	10.4						
	3	3.5 (8.0)	75/63	11.8	10.0	15.6	1.23	9.6						
			80/67	12.7	10.5	16.5	1.23	10.4						
			85/71	13.6	10.9	17.5	1.23	11.1						
	4.5	7.3 (16.8)	75/63	12.0	10.1	15.7	1.21	9.9						
			80/67	12.9	10.6	16.6	1.20	10.8						
			85/71	13.9	11.0	17.6	1.20	11.6						
110	2	1.7 (3.9)	75/63	10.7	9.6	15.0	1.38	7.8						
			80/67	11.5	10.0	15.8	1.38	8.3						
			85/71	12.4	10.4	16.7	1.39	8.9						
	3	3.4 (7.8)	75/63	11.0	9.7	15.1	1.34	8.2						
			80/67	11.8	10.2	16.0	1.34	8.8						
			85/71	12.7	10.6	16.9	1.34	9.5						
	4.5	7.1 (16.3)	75/63	11.1	9.8	15.2	1.32	8.4						
			80/67	12.0	10.3	16.1	1.32	9.1						
			85/71	12.9	10.7	17.0	1.31	9.8						

NOTE: See Legend and Notes on page 25.

50PCH, PCV, PCD018 — 650 CFM NOMINAL AIRFLOW

COOLING									HEATING					
EWT (F)	Water Flow (gpm)	Pressure Drop psi (FOH)	Entering Air Temp (db/wb) (F)	Total Capacity (MBtuh)	Sensible Capacity (MBtuh)	Heat of Rejection (MBtuh)	Power Input (kW)	EER	EWT (F)	Entering Air Temp (F)	Total Capacity (MBtuh)	Heat of Absorption (MBtuh)	Power Input (kW)	COP
50	2.5	1.2 (2.7)	75/63	22.3	15.9	26.1	1.24	18.0	30	60	12.3	9.0	1.11	3.2
			80/67	24.1	16.5	27.9	1.25	19.3		70	11.6	8.3	1.15	3.0
			85/71	25.9	17.0	29.8	1.26	20.6		80	10.9	7.5	1.18	2.7
	4	2.9 (6.6)	75/63	23.5	16.3	27.1	1.15	20.4		60	13.1	9.8	1.14	3.4
			80/67	25.4	16.9	29.0	1.15	22.1		70	12.3	8.9	1.18	3.1
			85/71	27.4	17.4	31.0	1.15	23.9		80	11.6	8.0	1.21	2.8
	5	4.3 (9.9)	75/63	23.9	16.5	27.4	1.12	21.3		60	13.4	10.1	1.15	3.4
			80/67	25.8	17.1	29.4	1.12	23.1		70	12.6	9.2	1.19	3.1
			85/71	27.9	17.6	31.4	1.11	25.3		80	11.8	8.2	1.22	2.8
60	2.5	1.2 (2.7)	75/63	21.1	15.3	25.1	1.33	15.9	40	60	14.7	11.2	1.19	3.6
			80/67	22.8	15.9	26.9	1.34	17.0		70	14.0	10.3	1.24	3.3
			85/71	24.5	16.4	28.7	1.36	18.1		80	13.3	9.5	1.28	3.0
	4	2.8 (6.4)	75/63	22.2	15.8	26.0	1.25	17.8		60	15.8	12.1	1.22	3.8
			80/67	24.0	16.4	27.9	1.26	19.1		70	15.0	11.2	1.27	3.5
			85/71	25.9	16.9	29.8	1.26	20.6		80	14.2	10.2	1.31	3.2
	5	4.1 (9.4)	75/63	22.6	16.0	26.3	1.22	18.5		60	16.2	12.5	1.23	3.8
			80/67	24.5	16.5	28.2	1.22	20.1		70	15.3	11.5	1.28	3.5
			85/71	26.4	17.1	30.3	1.22	21.7		80	14.5	10.5	1.33	3.2
70	2.5	1.1 (2.54)	75/63	19.8	14.8	24.0	1.42	14.0	50	60	17.6	13.4	1.26	4.1
			80/67	21.4	15.3	25.7	1.44	14.9		70	16.8	12.4	1.32	3.7
			85/71	23.1	15.7	27.6	1.46	15.9		80	15.8	11.6	1.38	3.4
	4	2.7 (6.2)	75/63	20.8	15.2	24.9	1.35	15.5		60	18.9	14.5	1.30	4.3
			80/67	22.6	15.8	26.7	1.36	16.7		70	18.0	13.4	1.36	3.9
			85/71	24.5	16.2	28.7	1.37	17.9		80	17.1	12.3	1.42	3.5
	5	4 (9.2)	75/63	21.2	15.4	25.2	1.32	16.1		60	19.1	15.2	1.31	4.3
			80/67	23.0	16.0	27.0	1.33	17.3		70	18.5	13.8	1.37	3.9
			85/71	24.9	16.4	29.1	1.33	18.7		80	17.5	12.6	1.43	3.6
80	2.5	1.1 (2.54)	75/63	18.5	14.1	22.9	1.50	12.4	60	60	20.3	15.9	1.33	4.5
			80/67	20.1	14.6	24.6	1.53	13.2		70	19.5	14.8	1.40	4.1
			85/71	21.6	15.3	26.2	1.55	13.9		80	18.4	13.9	1.47	3.7
	4	2.6 (5.9)	75/63	19.5	14.5	23.7	1.44	13.6		60	21.6	17.5	1.37	4.6
			80/67	21.1	15.1	25.5	1.46	14.5		70	20.9	16.0	1.45	4.2
			85/71	22.9	15.6	27.4	1.47	15.6		80	19.9	14.7	1.52	3.8
	5	3.9 (8.9)	75/63	19.8	14.7	24.0	1.42	14.0		60	22.1	18.1	1.39	4.7
			80/67	21.5	15.3	25.8	1.43	15.0		70	21.5	16.4	1.46	4.3
			85/71	23.4	15.8	27.7	1.44	16.2		80	20.4	15.1	1.53	3.9
85	2.5	1.1 (2.54)	75/63	17.8	13.8	22.3	1.54	11.6	70	60	23.2	18.4	1.40	4.8
			80/67	19.3	14.5	23.9	1.57	12.3		70	22.0	17.5	1.49	4.3
			85/71	20.8	15.0	25.6	1.60	13.0		80	21.1	16.3	1.56	3.9
	4	2.6 (5.9)	75/63	18.8	14.2	23.1	1.49	12.7		60	25.0	20.0	1.44	5.1
			80/67	20.3	14.9	24.8	1.51	13.5		70	23.9	18.6	1.53	4.6
			85/71	22.0	15.5	26.6	1.53	14.4		80	22.8	17.2	1.61	4.1
	5	3.8 (8.7)	75/63	19.1	14.3	23.4	1.47	13.0		60	25.3	21.0	1.46	5.1
			80/67	20.8	14.9	25.2	1.49	14.0		70	24.5	19.1	1.54	4.6
			85/71	22.5	15.5	27.0	1.50	15.0		80	23.4	17.7	1.63	4.2
90	2.5	1.1 (2.54)	75/63	17.1	13.6	21.7	1.58	10.8	80	60	26.0	21.1	1.46	5.2
			80/67	18.6	14.2	23.3	1.62	11.5		70	24.8	20.0	1.56	4.7
			85/71	20.1	14.7	25.0	1.65	12.2		80	23.8	18.7	1.65	4.2
	4	2.5 (5.7)	75/63	18.0	13.8	22.5	1.53	11.8		60	28.1	22.9	1.50	5.5
			80/67	19.6	14.6	24.1	1.56	12.6		70	26.9	21.4	1.60	4.9
			85/71	21.2	15.1	25.9	1.58	13.5		80	25.5	20.1	1.70	4.4
	5	3.8 (8.7)	75/63	18.3	14.0	22.7	1.51	12.1		60	28.5	24.0	1.52	5.5
			80/67	19.9	14.6	24.5	1.53	13.0		70	27.6	21.9	1.62	5.0
			85/71	21.6	15.3	26.3	1.55	13.9		80	25.9	20.7	1.71	4.4
100	2.5	1 (2.3)	75/63	15.6	13.0	20.3	1.65	9.5	Operation Not Recommended					
			80/67	17.0	13.6	21.9	1.70	10.0						
			85/71	18.5	14.1	23.6	1.74	10.7						
	4	2.4 (5.5)	75/63	16.5	13.3	21.1	1.61	10.2						
			80/67	18.0	14.0	22.8	1.65	10.9						
			85/71	19.6	14.5	24.5	1.68	11.7						
	5	3.6 (8.3)	75/63	16.8	13.5	21.4	1.60	10.5						
			80/67	18.3	14.1	23.1	1.63	11.3						
			85/71	20.0	14.6	24.9	1.66	12.1						
110	2.5	1 (2.3)	75/63	14.1	12.3	18.9	1.72	8.2						
			80/67	15.4	12.9	20.4	1.77	8.7						
			85/71	16.7	13.7	21.9	1.81	9.2						
	4	2.4 (5.5)	75/63	14.9	12.6	19.6	1.69	8.8						
			80/67	16.4	13.2	21.3	1.73	9.5						
			85/71	17.8	13.9	23.0	1.77	10.1						
	5	3.5 (8.0)	75/63	15.1	12.8	19.8	1.68	9.0						
			80/67	16.7	13.3	21.6	1.72	9.7						
			85/71	18.2	14.0	23.3	1.75	10.4						

NOTE: See Legend and Notes on page 25.

Performance data (cont)

50PCH, PCV, PCD024 — 850 CFM NOMINAL AIRFLOW

COOLING									HEATING					
EWT (F)	Water Flow (gpm)	Pressure Drop psi (FOH)	Entering Air Temp (db/wb) (F)	Total Capacity (MBtuh)	Sensible Capacity (MBtuh)	Heat of Rejection (MBtuh)	Power Input (kW)	EER	EWT (F)	Entering Air Temp (F)	Total Capacity (MBtuh)	Heat of Absorption (MBtuh)	Power Input (kW)	COP
50	3	1.8 (4.1)	75/63	25.6	18.6	30.0	1.44	17.8	30	60	15.3	11.2	1.37	3.3
			80/67	27.5	19.2	32.0	1.45	19.0		70	14.6	10.3	1.43	3
			85/71	29.5	19.8	34.0	1.45	20.4		80	13.9	9.3	1.48	2.7
	5	4.5 (10.3)	75/63	26.9	19.1	31.0	1.33	20.2		60	16.3	12	1.42	3.4
			80/67	28.9	19.8	33.1	1.33	21.8		70	15.5	11.1	1.47	3.1
			85/71	31.1	20.4	35.3	1.31	23.7		80	14.7	10	1.52	2.8
	7	8.2 (18.9)	75/63	27.5	19.4	31.5	1.28	21.5		60	16.8	12.5	1.44	3.4
			80/67	29.6	20.1	33.6	1.27	23.4		70	15.9	11.5	1.5	3.1
			85/71	31.8	20.7	35.8	1.25	25.5		80	15.1	10.4	1.55	2.9
60	3	1.7 (3.9)	75/63	24.3	18.0	29.0	1.55	15.7	40	60	18	13.4	1.48	3.6
			80/67	26.1	18.6	30.9	1.56	16.7		70	17.2	12.5	1.55	3.3
			85/71	28.0	19.2	32.9	1.58	17.8		80	16.4	11.5	1.61	3
	5	4.3 (9.8)	75/63	25.5	18.5	29.9	1.45	17.6		60	19.3	14.6	1.53	3.7
			80/67	27.5	19.2	32.0	1.45	19.0		70	18.4	13.5	1.6	3.4
			85/71	29.6	19.8	34.1	1.45	20.5		80	17.5	12.5	1.66	3.1
	7	7.9 (18.2)	75/63	26.1	18.8	30.4	1.40	18.6		60	20	15.2	1.55	3.8
			80/67	28.1	19.4	32.5	1.40	20.1		70	19	14	1.62	3.4
			85/71	30.3	20.1	34.6	1.38	21.9		80	18.1	12.9	1.68	3.2
70	3	1.7 (3.9)	75/63	22.9	17.3	27.9	1.66	13.8	50	60	20.9	16	1.58	3.9
			80/67	24.7	18.0	29.8	1.68	14.7		70	20.1	14.9	1.66	3.5
			85/71	26.5	18.6	31.7	1.70	15.6		80	19.6	13.7	1.73	3.3
	5	4.2 (9.6)	75/63	24.1	17.8	28.8	1.57	15.4		60	22.4	17.5	1.63	4
			80/67	26.0	18.5	30.8	1.58	16.5		70	21.5	16.2	1.71	3.7
			85/71	27.9	19.2	32.8	1.58	17.6		80	21	14.8	1.79	3.4
	7	7.7 (17.7)	75/63	24.6	18.1	29.2	1.53	16.1		60	23.3	18.1	1.66	4.1
			80/67	26.6	18.8	31.3	1.53	17.4		70	22.2	16.8	1.74	3.7
			85/71	28.6	19.4	33.4	1.53	18.8		80	21.6	15.2	1.82	3.5
80	3	1.6 (3.6)	75/63	21.5	16.6	26.7	1.77	12.1	60	60	24	18.7	1.68	4.2
			80/67	23.1	17.3	28.5	1.80	12.8		70	23.1	17.6	1.77	3.8
			85/71	24.9	17.9	30.4	1.83	13.6		80	22.6	16.2	1.86	3.6
	5	4 (9.2)	75/63	22.5	17.2	27.6	1.69	13.3		60	25.8	20.4	1.73	4.4
			80/67	24.4	17.8	29.5	1.71	14.3		70	24.8	19.2	1.83	4
			85/71	26.3	18.5	31.5	1.72	15.3		80	24.2	17.4	1.92	3.7
	7	7.4 (17.0)	75/63	23.0	17.4	28.0	1.65	13.9		60	26.8	21.3	1.75	4.5
			80/67	24.9	18.0	30.0	1.66	15.0		70	25.7	19.9	1.86	4.1
			85/71	26.9	18.7	32.0	1.67	16.1		80	24.5	18.4	1.95	3.7
85	3	1.6 (3.6)	75/63	20.7	16.3	26.1	1.83	11.3	70	60	27.1	21.6	1.76	4.5
			80/67	22.4	17.0	27.9	1.86	12.1		70	26.2	20.4	1.87	4.1
			85/71	24.1	17.6	29.7	1.89	12.8		80	25.2	19.1	1.98	3.7
	5	4 (9.2)	75/63	21.8	16.8	26.9	1.75	12.5		60	29.3	23.6	1.82	4.7
			80/67	23.5	17.5	28.9	1.77	13.3		70	28.2	22.1	1.93	4.3
			85/71	25.4	18.1	30.8	1.79	14.2		80	27	20.6	2.04	3.9
	7	7.3 (16.8)	75/63	22.2	17.0	27.3	1.71	13.0		60	30.4	24.6	1.84	4.8
			80/67	24.1	17.7	29.3	1.73	13.9		70	29.2	23	1.96	4.4
			85/71	26.0	18.3	31.3	1.74	14.9		80	27.9	21.3	2.07	3.9
90	3	1.6 (3.6)	75/63	20.0	15.9	25.5	1.88	10.7	80	60	30.4	24.6	1.84	4.8
			80/67	21.5	16.7	27.2	1.92	11.2		70	29.4	23.2	1.97	4.4
			85/71	23.2	17.2	29.1	1.95	11.9		80	28.3	21.8	2.09	4
	5	3.9 (8.9)	75/63	21.0	16.4	26.3	1.81	11.6		60	32.8	26.9	1.89	5.1
			80/67	22.7	17.1	28.2	1.84	12.4		70	31.6	25.2	2.02	4.6
			85/71	24.5	17.7	30.1	1.86	13.2		80	30.3	23.5	2.15	4.1
	7	7.2 (16.6)	75/63	21.4	16.6	26.7	1.78	12.1		60	34	28	1.91	5.2
			80/67	23.2	17.3	28.6	1.80	12.9		70	32.7	26.2	2.05	4.7
			85/71	25.1	17.9	30.6	1.81	13.9		80	31.3	24.3	2.18	4.2
100	3	1.5 (3.4)	75/63	18.4	15.2	24.1	1.98	9.3	Operation Not Recommended					
			80/67	19.9	15.9	25.8	2.03	9.8						
			85/71	21.4	16.6	27.6	2.07	10.3						
	5	3.8 (8.7)	75/63	19.3	15.7	24.9	1.92	10.1						
			80/67	20.9	16.4	26.7	1.96	10.7						
			85/71	22.6	17.1	28.6	1.99	11.4						
	7	7 (16.1)	75/63	19.7	15.9	25.2	1.89	10.4						
			80/67	21.4	16.6	27.1	1.93	11.1						
			85/71	23.2	17.3	29.0	1.95	11.9						
110	3	1.5 (3.4)	75/63	16.7	14.6	22.6	2.08	8.1						
			80/67	18.1	15.3	24.3	2.13	8.5						
			85/71	19.5	15.9	26.0	2.19	8.9						
	5	3.7 (8.5)	75/63	17.5	15.0	23.4	2.03	8.6						
			80/67	19.1	15.6	25.2	2.08	9.2						
			85/71	20.7	16.3	27.0	2.12	9.8						
	7	6.8 (15.6)	75/63	17.9	15.1	23.7	2.01	8.9						
			80/67	19.6	15.8	25.6	2.05	9.6						
			85/71	21.2	16.6	27.4	2.09	10.2						

NOTE: See Legend and Notes on page 25.

50PCH, PCV, PCD030 — 950 CFM NOMINAL AIRFLOW

COOLING									HEATING					
EWT (F)	Water Flow (gpm)	Pressure Drop psi (FOH)	Entering Air Temp (db/wb) (F)	Total Capacity (MBtuh)	Sensible Capacity (MBtuh)	Heat of Rejection (MBtuh)	Power Input (kW)	EER	EWT (F)	Entering Air Temp (F)	Total Capacity (MBtuh)	Heat of Absorption (MBtuh)	Power Input (kW)	COP
50	3.5	1.7 (3.9)	75/63	34.3	25.3	39.4	1.65	20.8	30	60	18.3	13.9	1.46	3.7
			80/67	36.8	26.1	42.0	1.66	22.2		70	17.5	12.8	1.53	3.4
			85/71	39.4	26.9	44.6	1.66	23.8		80	16.6	11.6	1.59	3.1
	6	4.5 (10.3)	75/63	36.1	26.1	40.8	1.50	24.1		60	19.8	15.3	1.51	3.8
			80/67	38.8	27.0	43.5	1.48	26.2		70	18.8	14.0	1.58	3.5
			85/71	41.7	27.8	46.4	1.46	28.6		80	17.8	12.6	1.64	3.2
	9	9.3 (21.4)	75/63	37.0	26.5	41.5	1.42	26.0		60	20.7	16.0	1.54	3.9
			80/67	39.8	27.4	44.3	1.40	28.5		70	19.6	14.7	1.62	3.6
			85/71	42.8	28.2	47.2	1.36	31.5		80	18.4	13.3	1.68	3.2
60	3.5	1.6 (3.7)	75/63	32.5	24.5	38.0	1.80	18.1	40	60	21.7	16.9	1.58	4.0
			80/67	34.9	25.4	40.5	1.81	19.3		70	20.8	15.7	1.66	3.7
			85/71	37.3	26.1	43.0	1.82	20.5		80	19.8	14.5	1.74	3.3
	6	4.3 (9.9)	75/63	34.2	25.3	39.3	1.66	20.6		60	23.6	18.6	1.64	4.2
			80/67	36.9	26.2	42.0	1.65	22.3		70	22.5	17.2	1.73	3.8
			85/71	39.6	27.0	44.8	1.64	24.2		80	21.3	15.8	1.81	3.5
	9	8.9 (20.5)	75/63	35.1	25.6	40.0	1.59	22.1		60	24.7	19.5	1.68	4.3
			80/67	37.8	26.6	42.8	1.57	24.1		70	23.5	18.0	1.77	3.9
			85/71	40.7	27.4	45.6	1.54	26.3		80	22.2	16.5	1.85	3.5
70	3.5	1.6 (3.7)	75/63	30.6	23.7	36.5	1.94	15.7	50	60	25.4	20.1	1.70	4.4
			80/67	33.0	24.4	39.0	1.97	16.8		70	24.5	18.7	1.80	4.0
			85/71	35.3	25.4	41.4	1.99	17.8		80	23.3	17.4	1.89	3.6
	6	4.2 (9.6)	75/63	32.2	24.4	37.8	1.82	17.7		60	27.7	22.3	1.76	4.6
			80/67	34.8	25.3	40.4	1.82	19.1		70	26.6	20.7	1.87	4.2
			85/71	37.4	26.1	43.1	1.82	20.5		80	25.4	19.1	1.97	3.8
	9	8.6 (19.8)	75/63	33.0	24.7	38.4	1.75	18.8		60	29.1	23.5	1.80	4.7
			80/67	35.7	25.7	41.1	1.75	20.4		70	27.8	21.8	1.90	4.3
			85/71	38.4	26.5	43.9	1.73	22.1		80	26.5	20.1	2.00	3.9
80	3.5	1.5 (3.4)	75/63	28.7	22.7	35.0	2.09	13.7	60	60	29.7	23.5	1.80	4.8
			80/67	30.9	23.6	37.4	2.12	14.5		70	28.2	22.3	1.92	4.3
			85/71	33.2	24.4	39.8	2.15	15.4		80	27.2	20.8	2.03	3.9
	6	4 (9.2)	75/63	30.2	23.3	36.2	1.98	15.3		60	32.1	26.3	1.87	5.0
			80/67	32.6	24.3	38.8	1.99	16.3		70	30.8	24.6	1.99	4.5
			85/71	35.1	25.1	41.3	2.00	17.5		80	29.6	22.8	2.11	4.1
	9	8.4 (19.3)	75/63	30.9	23.6	36.8	1.92	16.0		60	33.6	27.7	1.90	5.2
			80/67	33.4	24.8	39.3	1.93	17.3		70	32.3	25.9	2.03	4.7
			85/71	36.0	25.7	42.0	1.93	18.7		80	30.8	24.0	2.15	4.2
85	3.5	1.5 (3.4)	75/63	27.7	22.4	34.1	2.15	12.8	70	60	33.7	27.3	1.90	5.2
			80/67	29.8	23.3	36.4	2.20	13.6		70	32.2	25.9	2.03	4.7
			85/71	32.0	24.1	38.8	2.23	14.3		80	31.0	24.2	2.16	4.2
	6	4 (9.2)	75/63	29.2	22.9	35.4	2.05	14.2		60	36.5	30.4	1.96	5.5
			80/67	31.5	23.9	37.8	2.08	15.2		70	35.1	28.6	2.11	4.9
			85/71	33.9	24.8	40.4	2.09	16.2		80	33.7	26.7	2.24	4.4
	9	8.2 (18.9)	75/63	29.8	23.4	35.9	2.00	14.9		60	38.3	32.1	1.99	5.6
			80/67	32.3	24.3	38.4	2.02	16.0		70	36.8	30.1	2.14	5.0
			85/71	34.8	25.1	41.1	2.02	17.2		80	35.2	28.0	2.29	4.5
90	3.5	1.5 (3.4)	75/63	26.7	21.9	33.3	2.22	12.0	80	60	37.8	31.1	1.98	5.6
			80/67	28.7	22.8	35.6	2.27	12.6		70	36.2	29.6	2.13	5.0
			85/71	30.9	23.5	38.0	2.31	13.3		80	35.0	27.7	2.28	4.5
	6	3.9 (8.9)	75/63	28.0	22.5	34.4	2.13	13.1		60	41.0	34.7	2.03	5.9
			80/67	30.3	23.4	36.9	2.16	14.0		70	39.5	32.6	2.20	5.3
			85/71	32.7	24.2	39.4	2.18	15.0		80	38.0	30.5	2.36	4.7
	9	8.1 (18.6)	75/63	28.7	22.9	34.9	2.08	13.8		60	43.1	36.7	2.06	6.1
			80/67	31.1	23.8	37.5	2.11	14.8		70	41.4	34.3	2.23	5.4
			85/71	33.6	24.6	40.1	2.12	15.8		80	39.7	32.0	2.40	4.8
100	3.5	1.4 (3.2)	75/63	24.6	21.0	31.6	2.36	10.4	Operation Not Recommended					
			80/67	26.6	21.8	33.8	2.42	11.0						
			85/71	28.5	22.8	36.0	2.47	11.5						
	6	3.8 (8.7)	75/63	25.9	21.4	32.6	2.28	11.3						
			80/67	28.0	22.5	34.9	2.32	12.1						
			85/71	30.2	23.4	37.4	2.36	12.8						
	9	7.9 (18.2)	75/63	26.4	21.7	33.1	2.24	11.8						
			80/67	28.6	22.8	35.5	2.28	12.6						
			85/71	31.0	23.8	38.0	2.30	13.4						
110	3.5	1.4 (3.2)	75/63	22.6	19.9	29.9	2.48	9.1						
			80/67	24.3	21.0	31.9	2.55	9.5						
			85/71	26.1	21.9	34.0	2.62	10.0						
	6	3.7 (8.5)	75/63	23.6	20.4	30.8	2.42	9.7						
			80/67	25.6	21.4	33.0	2.48	10.3						
			85/71	27.6	22.5	35.2	2.53	10.9						
	9	7.6 (17.5)	75/63	24.0	20.6	31.1	2.39	10.0						
			80/67	26.1	21.7	33.4	2.44	10.7						
			85/71	28.3	22.5	35.8	2.49	11.4						

NOTE: See Legend and Notes on page 25.

Performance data (cont)

50PCH, PCV, PCD036 — 1200 CFM NOMINAL AIRFLOW

COOLING									HEATING					
EWT (F)	Water Flow (gpm)	Pressure Drop psi (FOH)	Entering Air Temp (db/wb) (F)	Total Capacity (MBtuh)	Sensible Capacity (MBtuh)	Heat of Rejection (MBtuh)	Power Input (kW)	EER	EWT (F)	Entering Air Temp (F)	Total Capacity (MBtuh)	Heat of Absorption (MBtuh)	Power Input (kW)	COP
50	4	1.3 (2.9)	75/63	40.8	30.0	47.7	2.16	18.9	30	60	23.5	17.0	2.00	3.5
			80/67	43.7	31.0	50.7	2.17	20.1		70	22.4	15.7	2.09	3.2
			85/71	46.7	31.9	53.7	2.18	21.4		80	20.9	13.5	2.15	2.9
	7.5	4.2 (9.6)	75/63	43.4	31.0	49.7	1.96	22.1		60	25.2	18.7	2.07	3.6
			80/67	46.7	32.0	53.0	1.95	24.0		70	24.0	17.3	2.17	3.2
			85/71	50.0	32.9	56.3	1.93	25.9		80	22.7	15.7	2.25	3.0
	11	8.3 (19.1)	75/63	44.4	31.5	50.4	1.88	23.6		60	26.5	19.6	2.11	3.7
			80/67	47.8	32.4	53.8	1.86	25.7		70	25.0	18.1	2.21	3.3
			85/71	51.3	33.5	57.2	1.83	28.0		80	23.7	16.5	2.30	3.0
60	4	1.3 (2.9)	75/63	38.7	29.1	46.0	2.33	16.6	40	60	27.2	20.5	2.15	3.7
			80/67	41.5	30.0	49.0	2.35	17.6		70	26.3	18.9	2.26	3.4
			85/71	44.5	30.8	52.0	2.37	18.8		80	25.5	16.8	2.35	3.2
	7.5	4 (9.6)	75/63	41.2	30.1	47.9	2.14	19.3		60	29.9	22.7	2.24	3.9
			80/67	44.3	31.1	51.1	2.13	20.8		70	28.6	21.0	2.35	3.6
			85/71	47.6	32.0	54.4	2.12	22.4		80	27.2	19.2	2.45	3.3
	11	8 (18.4)	75/63	42.1	30.5	48.7	2.06	20.4		60	31.0	23.7	2.27	4.0
			80/67	45.4	31.5	51.9	2.05	22.2		70	29.6	22.0	2.39	3.6
			85/71	48.8	32.4	55.3	2.02	24.1		80	28.3	20.3	2.50	3.3
70	4	1.3 (2.9)	75/63	36.5	28.0	44.4	2.51	14.5	50	60	31.9	24.2	2.29	4.1
			80/67	39.3	28.9	47.2	2.54	15.5		70	30.8	22.6	2.42	3.7
			85/71	42.0	29.8	50.1	2.56	16.4		80	29.3	21.1	2.54	3.4
	7.5	3.9 (8.9)	75/63	38.9	29.0	46.2	2.33	16.7		60	35.0	27.2	2.39	4.3
			80/67	41.9	30.0	49.3	2.33	18.0		70	33.9	25.2	2.52	3.9
			85/71	45.0	31.1	52.4	2.32	19.3		80	32.2	22.8	2.64	3.6
	11	7.8 (17.9)	75/63	39.8	29.4	46.9	2.25	17.7		60	36.9	28.3	2.42	4.5
			80/67	42.9	30.4	50.0	2.25	19.1		70	35.6	25.8	2.56	4.1
			85/71	46.2	31.3	53.3	2.23	20.7		80	33.1	24.8	2.69	3.6
80	4	1.2 (2.7)	75/63	34.3	27.0	42.6	2.69	12.8	60	60	36.6	28.3	2.42	4.4
			80/67	36.9	28.0	45.4	2.73	13.5		70	35.4	26.6	2.57	4.0
			85/71	39.4	29.1	48.1	2.76	14.3		80	33.8	24.9	2.71	3.7
	7.5	3.8 (8.7)	75/63	36.5	27.9	44.3	2.52	14.5		60	40.2	32.0	2.52	4.7
			80/67	39.3	29.0	47.3	2.53	15.5		70	37.4	29.0	2.66	4.1
			85/71	42.3	30.1	50.3	2.54	16.7		80	36.9	27.9	2.83	3.8
	11	7.5 (17.2)	75/63	37.3	28.3	45.0	2.45	15.2		60	41.9	33.9	2.56	4.8
			80/67	40.3	29.5	48.0	2.46	16.4		70	40.7	31.1	2.72	4.4
			85/71	43.4	30.3	51.2	2.45	17.7		80	38.3	29.3	2.88	3.9
85	4	1.2 (2.7)	75/63	33.1	26.5	41.7	2.77	11.9	70	60	41.4	32.7	2.54	4.8
			80/67	35.6	27.5	44.4	2.82	12.6		70	39.9	30.9	2.71	4.3
			85/71	38.2	28.4	47.1	2.86	13.4		80	38.7	29.0	2.88	3.9
	7.5	3.7 (8.5)	75/63	35.2	27.5	43.3	2.61	13.5		60	46.0	36.9	2.64	5.1
			80/67	38.0	28.4	46.3	2.64	14.4		70	44.4	34.6	2.82	4.6
			85/71	41.0	29.4	49.3	2.65	15.5		80	42.9	32.0	3.00	4.2
	11	7.4 (17.0)	75/63	36.0	27.7	44.0	2.55	14.1		60	48.1	38.7	2.67	5.3
			80/67	39.0	28.8	47.0	2.56	15.2		70	46.7	35.7	2.86	4.8
			85/71	42.0	30.0	50.0	2.56	16.4		80	44.7	33.2	3.04	4.3
90	4	1.2 (2.7)	75/63	31.9	26.1	40.6	2.86	11.1	80	60	46.3	37.3	2.64	5.1
			80/67	34.3	27.2	43.3	2.91	11.8		70	44.6	35.2	2.83	4.6
			85/71	36.8	28.2	46.0	2.95	12.5		80	43.3	33.1	3.02	4.2
	7.5	3.6 (8.3)	75/63	34.0	26.9	42.3	2.71	12.5		60	51.5	42.1	2.73	5.5
			80/67	36.6	28.1	45.2	2.74	13.4		70	49.2	39.5	2.94	4.9
			85/71	39.5	28.9	48.2	2.76	14.3		80	47.2	37.0	3.13	4.4
	11	7.3 (16.8)	75/63	34.7	27.2	42.9	2.65	13.1		60	53.8	44.2	2.76	5.7
			80/67	37.5	28.4	45.9	2.67	14.0		70	52.3	40.8	2.97	5.2
			85/71	40.5	29.5	48.9	2.68	15.1		80	49.3	39.0	3.18	4.5
100	4	1.1 (2.5)	75/63	29.5	25.0	38.7	3.03	9.7	Operation Not Recommended					
			80/67	31.7	26.3	41.2	3.09	10.2						
			85/71	34.1	27.2	43.9	3.15	10.8						
	7.5	3.5 (8.0)	75/63	31.3	26.0	40.2	2.90	10.8						
			80/67	34.0	26.9	43.1	2.94	11.5						
			85/71	36.6	27.9	45.9	2.97	12.3						
	11	7.1 (16.3)	75/63	32.1	26.1	40.8	2.85	11.2						
			80/67	34.8	27.2	43.7	2.88	12.1						
			85/71	37.6	28.2	46.6	2.90	12.9						
110	4	1.1 (2.5)	75/63	27.0	24.1	36.7	3.18	8.5						
			80/67	29.1	25.2	39.1	3.26	8.9						
			85/71	31.4	26.0	41.7	3.34	9.4						
	7.5	3.4 (7.8)	75/63	28.7	24.7	38.1	3.08	9.3						
			80/67	31.1	25.8	40.8	3.14	9.9						
			85/71	33.6	27.1	43.4	3.18	10.5						
	11	6.9 (15.9)	75/63	29.3	24.9	38.6	3.04	9.6						
			80/67	31.8	26.1	41.3	3.09	10.3						
			85/71	34.4	27.3	44.1	3.12	11.0						

NOTE: See Legend and Notes on page 25.

50PCH, PCV, PCD042 — 1500 CFM NOMINAL AIRFLOW

COOLING									HEATING					
EWT (F)	Water Flow (gpm)	Pressure Drop psi (FOH)	Entering Air Temp (db/wb) (F)	Total Capacity (MBtuh)	Sensible Capacity (MBtuh)	Heat of Rejection (MBtuh)	Power Input (kW)	EER	EWT (F)	Entering Air Temp (F)	Total Capacity (MBtuh)	Heat of Absorption (MBtuh)	Power Input (kW)	COP
50	5	2.1 (4.8)	75/63	45.2	33.0	53.8	2.72	16.6	30	60.0	27.6	19.2	2.6	3.1
			80/67	48.6	34.1	57.3	2.73	17.8		70.0	26.2	17.6	2.7	2.8
			85/71	52.0	35.1	60.8	2.73	19.0		80.0	25.1	15.9	2.8	2.6
	10	7.4 (17.0)	75/63	48.1	34.2	56.2	2.49	19.3		60.0	29.8	21.2	2.7	3.2
			80/67	51.7	35.4	59.9	2.48	20.9		70.0	28.3	19.4	2.8	3.0
			85/71	55.6	36.2	63.9	2.45	22.7		80.0	26.9	17.5	2.9	2.7
	13	11.8 (27.0)	75/63	48.8	34.6	56.8	2.44	20.0		60.0	30.4	21.8	2.7	3.3
			80/67	52.5	35.7	60.6	2.41	21.7		70.0	28.9	19.9	2.8	3.0
			85/71	56.5	36.6	64.6	2.38	23.7		80.0	27.5	17.9	2.9	2.8
60	5	2 (4.6)	75/63	42.9	32.0	51.8	2.91	14.7	40	60.0	31.9	23.0	2.8	3.4
			80/67	46.1	33.1	55.2	2.93	15.7		70.0	30.6	21.4	2.9	3.1
			85/71	49.4	34.1	58.7	2.94	16.8		80.0	29.4	19.7	3.0	2.9
	10	7.1 (16.3)	75/63	45.6	33.1	54.1	2.69	16.9		60.0	34.8	25.7	2.9	3.6
			80/67	49.2	34.1	57.8	2.68	18.3		70.0	33.9	23.4	3.0	3.3
			85/71	52.8	35.3	61.6	2.67	19.8		80.0	32	21.7	3.1	3.0
	13	11.4 (26.2)	75/63	46.2	33.4	54.7	2.64	17.5		60.0	35.7	26.3	2.9	3.6
			80/67	49.9	34.4	58.5	2.62	19.0		70.0	34.6	24	3.0	3.4
			85/71	53.7	35.6	62.3	2.60	20.7		80.0	32.6	22.3	3.2	3.0
70	5	2 (4.6)	75/63	40.4	30.9	49.8	3.10	13.0	50	60.0	36.7	27.3	2.9	3.7
			80/67	43.5	31.9	53.1	3.13	13.9		70.0	35.5	25.6	3.1	3.4
			85/71	46.7	32.9	56.6	3.16	14.8		80.0	34.2	23.6	3.2	3.1
	10	6.9 (15.9)	75/63	43.0	31.9	52.0	2.90	14.8		60.0	40.2	30.7	3.0	3.9
			80/67	46.4	33.1	55.5	2.90	16.0		70.0	39.3	28.2	3.2	3.6
			85/71	50.0	34.1	59.2	2.90	17.3		80.0	37.1	26.1	3.3	3.3
	13	11.1 (25.6)	75/63	43.6	32.2	52.5	2.85	15.3		60.0	41.8	31.1	3.0	4.0
			80/67	47.1	33.4	56.1	2.85	16.5		70.0	40.2	28.9	3.2	3.7
			85/71	50.8	34.4	59.9	2.83	17.9		80.0	38.0	26.7	3.4	3.3
80	5	1.9 (4.3)	75/63	37.9	29.7	47.7	3.30	11.5	60	60.0	41.8	32.0	3.1	4.0
			80/67	40.9	30.8	51.0	3.35	12.2		70.0	40.6	30.1	3.2	3.7
			85/71	43.8	32.0	54.1	3.38	13.0		80.0	39.7	27.9	3.4	3.4
	10	6.7 (15.4)	75/63	40.3	30.7	49.7	3.12	12.9		60.0	46.0	36.1	3.2	4.3
			80/67	43.6	31.8	53.2	3.13	13.9		70.0	45.0	33.2	3.3	4.0
			85/71	47.0	33.0	56.8	3.14	15.0		80.0	43.3	30.9	3.5	3.6
	13	10.7 (24.7)	75/63	40.9	31.0	50.2	3.07	13.3		60.0	47.8	36.5	3.2	4.4
			80/67	44.3	32.1	53.8	3.08	14.4		70.0	46.0	34.1	3.4	4.0
			85/71	47.7	33.3	57.4	3.07	15.5		80.0	45.2	30.6	3.5	3.7
85	5	1.9 (4.3)	75/63	36.6	29.1	46.6	3.40	10.7	70	60.0	47.1	36.9	3.2	4.4
			80/67	39.4	30.5	49.7	3.45	11.4		70.0	45.8	34.8	3.4	4.0
			85/71	42.4	31.3	53.0	3.49	12.1		80.0	44.9	32.4	3.6	3.7
	10	6.6 (15.2)	75/63	38.9	30.1	48.6	3.23	12.0		60.0	52.5	41.1	3.3	4.7
			80/67	42.0	31.4	51.9	3.25	12.9		70.0	50.8	38.5	3.5	4.3
			85/71	45.3	32.6	55.4	3.26	13.9		80.0	48.9	35.9	3.7	3.9
	13	10.5 (24.2)	75/63	39.5	30.3	49.1	3.18	12.4		60.0	53.9	42.3	3.3	4.8
			80/67	42.7	31.7	52.5	3.20	13.4		70.0	52.0	39.5	3.5	4.4
			85/71	46.1	32.8	56.0	3.20	14.4		80.0	51.1	35.5	3.7	4.0
90	5	1.9 (4.3)	75/63	35.1	28.7	45.4	3.50	10.0	80	60.0	52.5	42.1	3.3	4.7
			80/67	38.0	29.9	48.5	3.55	10.7		70.0	50.9	39.8	3.5	4.3
			85/71	40.9	30.8	51.8	3.60	11.4		80.0	49.3	37.2	3.7	3.9
	10	6.5 (14.9)	75/63	37.5	29.4	47.4	3.34	11.2		60.0	58.5	46.8	3.3	5.2
			80/67	40.6	30.7	50.8	3.36	12.1		70.0	56.6	43.9	3.6	4.6
			85/71	43.8	31.8	54.2	3.38	13.0		80.0	54.6	41.0	3.8	4.2
	13	10.4 (23.9)	75/63	38.0	29.7	47.9	3.30	11.5		60.0	59.5	48.7	3.3	5.2
			80/67	41.2	30.9	51.3	3.32	12.4		70.0	57.9	45.1	3.6	4.7
			85/71	44.5	32.1	54.8	3.33	13.4		80.0	56.9	40.5	3.8	4.4
100	5	1.8 (4.1)	75/63	32.5	27.5	43.1	3.69	8.8	Operation Not Recommended					
			80/67	35.1	28.8	46.1	3.76	9.3						
			85/71	37.9	29.7	49.2	3.82	9.9						
	10	6.3 (14.5)	75/63	34.5	28.4	44.9	3.55	9.7						
			80/67	37.5	29.7	48.1	3.59	10.4						
			85/71	40.6	30.7	51.5	3.63	11.2						
	13	10.1 (23.2)	75/63	35.0	28.6	45.3	3.51	10.0						
			80/67	38.0	29.9	48.6	3.55	10.7						
			85/71	41.2	30.9	52.0	3.58	11.5						
110	5	1.8 (4.1)	75/63	29.7	26.2	40.7	3.88	7.7						
			80/67	32.2	27.4	43.6	3.96	8.1						
			85/71	34.7	28.6	46.6	4.03	8.6						
	10	6.1 (14.0)	75/63	31.5	27.2	42.3	3.76	8.4						
			80/67	34.3	28.5	45.4	3.82	9.0						
			85/71	37.1	29.7	48.6	3.86	9.6						
	13	9.8 (22.6)	75/63	32.0	27.3	42.7	3.73	8.6						
			80/67	34.8	28.7	45.8	3.78	9.2						
			85/71	37.8	29.7	49.1	3.82	9.9						

NOTE: See Legend and Notes on page 25.

Performance data (cont)

50PCH, PCV, PCD048 — 1600 CFM NOMINAL AIRFLOW

COOLING									HEATING					
EWT (F)	Water Flow (gpm)	Pressure Drop psi (FOH)	Entering Air Temp (db/wb) (F)	Total Capacity (MBtuh)	Sensible Capacity (MBtuh)	Heat of Rejection (MBtuh)	Power Input (kW)	EER	EWT (F)	Entering Air Temp (F)	Total Capacity (MBtuh)	Heat of Absorption (MBtuh)	Power Input (kW)	COP
50	6	0.9 (2.0)	75/63	52.8	38.0	62.5	2.95	17.9	30	60	34.3	25.4	2.69	3.7
			80/67	56.3	39.1	66.0	2.97	19.0		70	32.0	22.6	2.79	3.4
			85/71	59.9	40.1	69.8	2.99	20.1		80	29.8	19.6	2.89	3.0
	12	3 (6.9)	75/63	56.5	39.7	65.2	2.63	21.5		60	36.9	27.5	2.81	3.8
			80/67	60.3	40.7	68.9	2.61	23.1		70	34.4	24.9	2.92	3.4
			85/71	64.3	41.6	72.9	2.58	24.9		80	32.0	21.9	3.02	3.1
	16	5.1 (11.7)	75/63	57.5	40.1	65.9	2.54	22.7		60	37.7	28.2	2.85	3.9
			80/67	61.4	41.1	69.8	2.51	24.5		70	35.2	25.5	2.96	3.5
			85/71	65.5	42.1	73.8	2.46	26.6		80	32.6	22.6	3.06	3.1
60	6	0.8 (1.8)	75/63	49.9	36.8	60.3	3.19	15.6	40	60	38.5	28.9	2.88	3.9
			80/67	53.3	37.9	63.8	3.23	16.5		70	36.5	26.5	3.02	3.5
			85/71	56.9	39.0	67.5	3.26	17.5		80	34.4	23.5	3.14	3.2
	12	2.9 (6.6)	75/63	53.4	38.3	62.9	2.91	18.4		60	41.8	31.8	3.01	4.1
			80/67	57.1	39.3	66.6	2.90	19.7		70	39.6	29.3	3.16	3.7
			85/71	61.0	40.4	70.6	2.89	21.1		80	37.3	26.5	3.29	3.3
	16	4.9 (11.3)	75/63	54.3	38.6	63.6	2.83	19.2		60	42.9	32.7	3.05	4.1
			80/67	58.1	39.7	67.4	2.81	20.7		70	40.6	30.2	3.20	3.7
			85/71	62.1	40.8	71.4	2.79	22.3		80	38.2	27.2	3.33	3.4
70	6	0.8 (1.8)	75/63	46.9	35.5	57.9	3.43	13.7	50	60	43.5	33.3	3.07	4.1
			80/67	50.3	36.6	61.6	3.48	14.5		70	41.5	30.7	3.23	3.8
			85/71	53.8	37.7	65.2	3.52	15.3		80	39.3	28.3	3.38	3.4
	12	2.8 (6.4)	75/63	50.2	36.8	60.5	3.18	15.8		60	47.4	36.5	3.21	4.3
			80/67	53.8	38.0	64.2	3.19	16.9		70	45.3	33.7	3.37	3.9
			85/71	57.6	39.1	68.1	3.19	18.0		80	43.2	31.0	3.54	3.6
	16	4.7 (10.8)	75/63	51.0	37.1	61.1	3.11	16.4		60	48.7	37.5	3.24	4.4
			80/67	54.7	38.3	64.9	3.11	17.6		70	46.6	35.5	3.42	4.0
			85/71	58.7	39.5	68.9	3.10	18.9		80	44.3	32.3	3.59	3.6
80	6	0.8 (1.8)	75/63	43.9	34.1	55.6	3.67	12.0	60	60	48.8	37.8	3.25	4.4
			80/67	47.2	35.2	59.2	3.73	12.7		70	47.0	35.3	3.43	4.0
			85/71	50.5	36.7	62.7	3.78	13.4		80	45.3	32.8	3.62	3.7
	12	2.7 (6.2)	75/63	46.8	35.3	57.9	3.44	13.6		60	53.7	42.2	3.39	4.6
			80/67	50.4	36.5	61.7	3.47	14.5		70	51.6	39.2	3.59	4.2
			85/71	54.2	37.7	65.6	3.49	15.5		80	49.5	37.0	3.79	3.8
	16	4.6 (10.6)	75/63	47.6	35.6	58.5	3.38	14.1		60	55.2	44.0	3.43	4.7
			80/67	51.3	36.9	62.3	3.40	15.1		70	53.0	41.1	3.64	4.3
			85/71	55.1	38.0	66.3	3.41	16.2		80	50.8	38.3	3.84	3.9
85	6	0.8 (1.8)	75/63	42.3	33.3	54.4	3.78	11.2	70	60	54.6	43.2	3.41	4.7
			80/67	45.5	34.9	57.8	3.85	11.8		70	52.8	40.7	3.63	4.3
			85/71	48.9	35.7	61.6	3.92	12.5		80	51.0	38.1	3.84	3.9
	12	2.7 (6.2)	75/63	45.2	34.5	56.6	3.57	12.7		60	60.3	48.3	3.56	5.0
			80/67	48.7	35.8	60.4	3.61	13.5		70	58.2	45.2	3.79	4.5
			85/71	52.3	37.2	64.2	3.64	14.4		80	56.0	42.8	4.02	4.1
	16	4.5 (10.3)	75/63	45.9	34.9	57.2	3.51	13.1		60	62.1	50.4	3.60	5.1
			80/67	49.5	36.1	61.0	3.54	14.0		70	59.8	47.3	3.84	4.6
			85/71	53.3	37.5	64.9	3.56	15.0		80	57.5	44.3	4.07	4.1
90	6	0.8 (1.8)	75/63	40.7	32.9	53.1	3.90	10.5	80	60	60.7	48.9	3.57	5.0
			80/67	44.0	33.9	56.7	3.98	11.1		70	58.9	46.2	3.81	4.5
			85/71	47.3	35.2	60.3	4.05	11.7		80	57.0	43.5	4.06	4.1
	12	2.6 (5.9)	75/63	43.5	33.7	55.3	3.70	11.8		60	67.3	54.7	3.70	5.3
			80/67	46.9	35.3	59.0	3.75	12.5		70	65.0	51.4	3.97	4.8
			85/71	50.6	36.3	62.9	3.79	13.4		80	62.8	48.1	4.23	4.4
	16	4.4 (10.1)	75/63	44.2	34.1	55.9	3.65	12.1		60	70.0	56.7	3.74	5.5
			80/67	47.7	35.6	59.6	3.68	13.0		70	66.8	53.8	4.02	4.9
			85/71	51.5	36.7	63.5	3.72	13.9		80	64.3	50.5	4.28	4.4
100	6	0.7 (1.6)	75/63	37.5	31.5	50.6	4.12	9.1	Operation Not Recommended					
			80/67	40.6	32.9	54.1	4.22	9.6						
			85/71	43.7	34.2	57.6	4.31	10.2						
	12	2.6 (5.9)	75/63	40.0	32.3	52.6	3.95	10.1						
			80/67	43.3	33.9	56.2	4.02	10.8						
			85/71	46.9	35.0	60.0	4.08	11.5						
	16	4.3 (9.9)	75/63	40.6	32.6	53.1	3.91	10.4						
			80/67	44.0	34.2	56.7	3.96	11.1						
			85/71	47.7	35.3	60.7	4.02	11.9						
110	6	0.7 (1.6)	75/63	34.4	30.2	48.2	4.35	7.9						
			80/67	37.2	31.7	51.4	4.46	8.3						
			85/71	40.2	33.0	54.8	4.57	8.8						
	12	2.5 (5.7)	75/63	36.5	30.9	49.8	4.20	8.7						
			80/67	39.6	32.5	53.3	4.29	9.2						
			85/71	43.0	34.0	57.0	4.36	9.9						
	16	4.2 (9.6)	75/63	37.0	31.1	50.2	4.17	8.9						
			80/67	40.3	32.5	53.9	4.25	9.5						
			85/71	43.7	34.3	57.5	4.31	10.2						

NOTE: See Legend and Notes on page 25.

50PCH, PCV, PCD060 — 2000 CFM NOMINAL AIRFLOW

COOLING									HEATING					
EWT (F)	Water Flow (gpm)	Pressure Drop psi (FOH)	Entering Air Temp (db/wb) (F)	Total Capacity (MBtuh)	Sensible Capacity (MBtuh)	Heat of Rejection (MBtuh)	Power Input (kW)	EER	EWT (F)	Entering Air Temp (F)	Total Capacity (MBtuh)	Heat of Absorption (MBtuh)	Power Input (kW)	COP
50	8	1.7 (3.9)	75/63	65.6	47.0	77.2	3.52	18.7	30	60	45.2	30.8	3.98	3.3
			80/67	70.0	48.3	81.8	3.56	19.7		70	45.7	27.9	4.35	3.1
			85/71	74.5	49.6	86.6	3.62	20.6		80	44.4	27.0	4.77	2.7
	13	4 (9.2)	75/63	67.6	47.9	78.5	3.28	20.6		60	47.4	32.6	4.03	3.4
			80/67	72.2	49.2	83.3	3.31	21.8		70	47.4	30.0	4.40	3.2
			85/71	77.1	50.5	88.3	3.35	23.1		80	46.9	27.9	4.81	2.9
	20	8.6 (19.8)	75/63	68.7	48.4	79.2	3.14	21.9		60	48.8	33.7	4.06	3.5
			80/67	73.5	49.8	84.1	3.16	23.2		70	48.2	31.4	4.43	3.2
			85/71	78.6	51.1	89.3	3.19	24.7		80	46.6	30.2	4.84	2.8
60	8	1.6 (3.6)	75/63	63.0	45.9	75.6	3.83	16.5	40	60	49.7	35.9	4.10	3.6
			80/67	67.2	47.2	80.1	3.88	17.3		70	51.5	33.0	4.48	3.4
			85/71	71.7	48.5	84.7	3.93	18.2		80	49.9	32.0	4.91	3.0
	13	3.8 (8.7)	75/63	64.9	46.7	76.8	3.59	18.1		60	53.7	38.3	4.16	3.8
			80/67	69.4	48.1	81.5	3.62	19.2		70	52.9	36.2	4.54	3.4
			85/71	74.2	49.3	86.4	3.66	20.3		80	53.0	33.4	4.96	3.1
	20	8.3 (19.1)	75/63	66.0	47.2	77.5	3.46	19.1		60	54.8	41.0	4.20	3.8
			80/67	70.7	48.6	82.3	3.48	20.3		70	54.6	37.5	4.57	3.5
			85/71	75.6	49.9	87.3	3.51	21.6		80	53.9	35.2	5.00	3.2
70	8	1.5 (3.4)	75/63	60.2	44.7	74.0	4.17	14.4	50	60	57.4	41.8	4.23	4.0
			80/67	64.4	46.1	78.3	4.22	15.3		70	55.7	40.0	4.62	3.5
			85/71	68.7	47.2	82.9	4.28	16.1		80	55.1	37.8	5.06	3.2
	13	3.7 (8.5)	75/63	62.1	45.5	75.1	3.93	15.8		60	60.7	44.8	4.3	4.1
			80/67	66.5	46.8	79.7	3.96	16.8		70	59.8	42.4	4.69	3.7
			85/71	71.1	48.1	84.4	4.00	17.8		80	58.9	39.9	5.13	3.4
	20	8.1 (18.6)	75/63	63.2	46.0	75.8	3.80	16.6		60	62.9	46.6	4.34	4.2
			80/67	67.7	47.3	80.4	3.82	17.7		70	61.8	44.0	4.74	3.8
			85/71	72.5	48.6	85.3	3.85	18.8		80	60.8	41.2	5.18	3.4
80	8	1.5 (3.4)	75/63	57.4	43.5	72.4	4.56	12.6	60	60	64.2	48.2	4.37	4.3
			80/67	61.5	44.8	76.6	4.61	13.4		70	63.4	45.8	4.78	3.9
			85/71	65.6	45.9	81.0	4.66	14.1		80	61.6	43.8	5.23	3.5
	13	3.6 (8.3)	75/63	59.3	44.2	73.4	4.31	13.8		60	68.3	51.7	4.46	4.5
			80/67	63.5	45.6	77.8	4.34	14.6		70	67.1	49.0	4.87	4.0
			85/71	67.9	46.8	82.4	4.38	15.5		80	66.1	46.3	5.32	3.6
	20	7.8 (17.9)	75/63	60.2	44.6	74.0	4.17	14.4		60	70.2	55.1	4.53	4.5
			80/67	64.6	46.0	78.5	4.20	15.4		70	68.5	51.4	4.93	4.1
			85/71	69.2	47.3	83.2	4.22	16.4		80	68.3	48.1	5.38	3.7
85	8	1.5 (3.4)	75/63	56.0	42.7	71.7	4.77	11.8	70	60	72.7	54.2	4.54	4.7
			80/67	60.0	44.1	75.8	4.82	12.5		70	71.7	51.6	4.95	4.2
			85/71	64.0	45.5	80.0	4.87	13.1		80	69.5	49.6	5.42	3.8
	13	3.5 (8.0)	75/63	57.8	43.5	72.6	4.51	12.8		60	76.2	59.0	4.65	4.8
			80/67	62.0	44.9	76.9	4.55	13.6		70	74.8	56.0	5.07	4.3
			85/71	66.3	46.1	81.5	4.58	14.5		80	73.5	53.0	5.53	3.9
	20	7.7 (17.7)	75/63	58.7	43.9	73.1	4.38	13.4		60	79.3	61.6	4.73	4.9
			80/67	63.0	45.4	77.6	4.40	14.3		70	76.6	58.8	5.15	4.4
			85/71	67.5	46.6	82.2	4.43	15.3		80	75.0	55.4	5.61	3.9
90	8	1.5 (3.4)	75/63	54.6	42.1	70.9	4.99	10.9	80	60	79.2	61.9	4.73	4.9
			80/67	58.5	43.4	75.0	5.04	11.6		70	79.1	58.3	5.15	4.5
			85/71	62.4	44.7	79.2	5.10	12.2		80	76.7	56.0	5.63	4.0
	13	3.5 (8.0)	75/63	56.3	42.8	71.8	4.73	11.9		60	84.5	66.6	4.87	5.1
			80/67	60.4	44.2	76.1	4.76	12.7		70	82.8	63.2	5.30	4.6
			85/71	64.5	45.8	80.3	4.80	13.5		80	81.3	59.9	5.77	4.1
	20	7.6 (17.5)	75/63	57.2	43.2	72.3	4.60	12.4		60	88.0	69.5	4.97	5.2
			80/67	61.4	44.7	76.6	4.62	13.3		70	85.0	66.4	5.39	4.6
			85/71	65.7	46.2	81.1	4.64	14.2		80	83.0	62.6	5.86	4.1
100	8	1.4 (3.2)	75/63	51.7	40.7	69.6	5.49	9.4	Operation Not Recommended					
			80/67	55.3	42.2	73.5	5.54	10.0						
			85/71	59.1	43.5	77.4	5.59	10.6						
	13	3.4 (7.8)	75/63	53.2	41.4	70.3	5.22	10.2						
			80/67	57.1	42.9	74.4	5.25	10.9						
			85/71	61.2	44.2	78.5	5.28	11.6						
	20	7.3 (16.8)	75/63	54.1	41.8	70.7	5.08	10.6						
			80/67	58.0	43.5	74.7	5.10	11.4						
			85/71	62.2	44.9	79.0	5.12	12.2						
110	8	1.4 (3.2)	75/63	48.5	39.4	68.4	6.08	8.0						
			80/67	52.0	40.9	72.1	6.12	8.5						
			85/71	55.6	42.3	75.8	6.17	9.0						
	13	3.3 (7.6)	75/63	50.0	40.0	68.9	5.79	8.6						
			80/67	53.6	41.8	72.7	5.81	9.2						
			85/71	57.4	43.3	76.6	5.84	9.8						
	20	7.1 (16.3)	75/63	50.7	40.5	69.1	5.65	9.0						
			80/67	54.5	42.2	73.0	5.65	9.6						
			85/71	58.4	43.7	77.1	5.67	10.3						

NOTE: See Legend and Notes on page 25.

Performance data (cont)

50PCH, PCV, PCD070 — 2200 CFM NOMINAL AIRFLOW

COOLING									HEATING					
EWT (F)	Water Flow (gpm)	Pressure Drop psi (FOH)	Entering Air Temp (db/wb) (F)	Total Capacity (MBtuh)	Sensible Capacity (MBtuh)	Heat of Rejection (MBtuh)	Power Input (kW)	EER	EWT (F)	Entering Air Temp (F)	Total Capacity (MBtuh)	Heat of Absorption (MBtuh)	Power Input (kW)	COP
50	10	2.6 (5.9)	75/63	72.2	53.9	85.4	3.96	18.3	30	60	49.4	35.1	4.19	3.5
			80/67	77.1	55.5	90.5	4.01	19.3		70	49.4	32.6	4.56	3.2
			85/71	82.2	57.0	95.9	4.06	20.2		80	48.8	30.5	4.97	2.9
	15	5.4 (12.4)	75/63	74.0	54.7	86.6	3.76	19.7		60	51.3	36.8	4.23	3.6
			80/67	79.2	56.3	91.9	3.80	20.9		70	50.2	34.6	4.59	3.2
			85/71	84.5	57.9	97.4	3.84	22.0		80	49.4	32.4	5.00	2.9
	20	9.1 (20.9)	75/63	74.9	55.1	87.2	3.66	20.5		60	52.1	37.7	4.24	3.6
			80/67	80.2	56.7	92.6	3.69	21.8		70	51.1	35.5	4.60	3.3
			85/71	85.7	58.3	98.2	3.72	23.0		80	50.0	32.9	5.01	2.9
60	10	2.5 (5.7)	75/63	69.2	52.5	83.5	4.29	16.1	40	60	55.7	41.0	4.30	3.8
			80/67	74.0	54.2	88.4	4.34	17.1		70	55.6	38.3	4.66	3.5
			85/71	78.9	55.8	93.6	4.39	18.0		80	54.9	36.1	5.08	3.2
	15	5.2 (11.9)	75/63	71.0	53.3	84.6	4.09	17.3		60	57.9	43.2	4.33	3.9
			80/67	75.9	55.0	89.7	4.13	18.4		70	56.8	40.9	4.70	3.5
			85/71	81.0	56.9	95.0	4.17	19.4		80	55.9	38.5	5.12	3.2
	20	8.7 (20.0)	75/63	71.8	53.7	85.2	4.00	18.0		60	59.2	44.5	4.35	4.0
			80/67	76.9	55.4	90.4	4.03	19.1		70	58.0	42.0	4.72	3.6
			85/71	82.1	57.3	95.7	4.06	20.2		80	56.9	39.3	5.14	3.2
70	10	2.4 (5.5)	75/63	66.1	51.2	81.5	4.65	14.2	50	60	62.6	47.7	4.40	4.2
			80/67	70.6	52.9	86.2	4.70	15.0		70	61.6	45.6	4.78	3.8
			85/71	75.4	54.5	91.2	4.76	15.9		80	60.8	42.9	5.21	3.4
	15	5 (11.5)	75/63	67.7	51.9	82.5	4.45	15.2		60	65.5	50.5	4.45	4.3
			80/67	72.4	53.9	87.4	4.49	16.1		70	64.2	47.8	4.83	3.9
			85/71	77.5	55.3	92.7	4.53	17.1		80	63.1	45.2	5.26	3.5
	20	8.5 (19.6)	75/63	68.5	52.5	82.9	4.35	15.7		60	67.1	52.0	4.47	4.4
			80/67	73.4	54.3	88.0	4.38	16.8		70	65.7	49.2	4.86	4.0
			85/71	78.5	56.0	93.3	4.42	17.8		80	64.4	46.4	5.28	3.6
80	10	2.4 (5.5)	75/63	62.8	49.8	79.5	5.05	12.4	60	60	71.1	54.5	4.53	4.6
			80/67	67.2	51.6	84.1	5.10	13.2		70	69.1	52.7	4.92	4.1
			85/71	71.6	53.6	88.7	5.15	13.9		80	67.6	49.5	5.35	3.7
	15	4.9 (11.3)	75/63	64.3	50.7	80.3	4.85	13.3		60	73.7	58.3	4.59	4.7
			80/67	68.9	52.6	85.1	4.88	14.1		70	72.2	55.3	4.98	4.2
			85/71	73.6	54.3	90.0	4.92	15.0		80	70.8	52.4	5.42	3.8
	20	8.2 (18.9)	75/63	65.1	51.1	80.8	4.75	13.7		60	75.8	60.2	4.62	4.8
			80/67	69.8	52.9	85.7	4.78	14.6		70	73.6	57.0	5.01	4.3
			85/71	74.7	54.7	90.7	4.81	15.5		80	72.4	53.8	5.45	3.9
85	10	2.3 (5.3)	75/63	61.0	49.4	78.4	5.27	11.6	70	60	79.3	62.2	4.67	5.0
			80/67	65.3	51.2	82.9	5.32	12.3		70	76.8	59.5	5.07	4.4
			85/71	69.7	52.9	87.5	5.37	13.0		80	75.4	56.4	5.52	4.0
	15	4.8 (11.0)	75/63	62.7	49.8	79.4	5.07	12.4		60	82.7	66.6	4.75	5.1
			80/67	67.2	51.6	84.1	5.10	13.2		70	80.4	63.4	5.15	4.6
			85/71	71.7	53.6	88.8	5.14	14.0		80	80.0	59.0	5.60	4.2
	20	8.1 (18.6)	75/63	63.5	50.1	79.9	4.97	12.8		60	84.8	68.7	4.79	5.2
			80/67	68.1	51.9	84.6	5.00	13.6		70	82.8	64.6	5.20	4.7
			85/71	72.7	54.0	89.4	5.02	14.5		80	80.4	61.7	5.64	4.2
90	10	2.3 (5.3)	75/63	59.5	48.4	77.6	5.51	10.8	80	60	87.9	70.2	4.84	5.3
			80/67	63.5	50.5	81.9	5.55	11.4		70	85.0	67.3	5.25	4.7
			85/71	68.0	51.9	86.6	5.61	12.1		80	83.8	64.1	5.71	4.3
	15	4.7 (10.8)	75/63	60.8	49.3	78.3	5.29	11.5		60	92.0	75.2	4.94	5.5
			80/67	65.4	50.9	83.0	5.33	12.3		70	89.2	71.7	5.35	4.9
			85/71	69.8	52.9	87.6	5.37	13.0		80	88.5	66.8	5.81	4.5
	20	7.9 (18.2)	75/63	61.6	49.6	78.7	5.19	11.9		60	94.3	77.6	4.99	5.5
			80/67	66.1	51.5	83.4	5.22	12.7		70	91.9	73.9	5.41	5.0
			85/71	70.9	52.9	88.3	5.26	13.5		80	89.2	69.8	5.86	4.5
100	10	2.2 (5.0)	75/63	55.9	47.4	75.7	6.02	9.3	Operation Not Recommended					
			80/67	59.9	49.2	79.9	6.07	9.9						
			85/71	64.1	50.6	84.3	6.13	10.5						
	15	4.6 (10.6)	75/63	57.3	47.8	76.4	5.81	9.9						
			80/67	61.5	49.8	80.7	5.84	10.5						
			85/71	65.8	51.5	85.2	5.87	11.2						
	20	7.7 (17.7)	75/63	57.9	48.1	76.7	5.71	10.2						
			80/67	62.2	50.3	81.1	5.72	10.9						
			85/71	66.8	51.5	85.9	5.76	11.6						
110	10	2.1 (4.8)	75/63	52.3	45.8	74.1	6.64	7.9						
			80/67	56.0	47.8	78.0	6.68	8.4						
			85/71	59.9	49.5	82.1	6.73	8.9						
	15	4.5 (10.3)	75/63	53.7	46.1	74.8	6.41	8.4						
			80/67	57.7	48.0	78.9	6.43	9.0						
			85/71	61.6	50.3	82.9	6.46	9.5						
	20	7.5 (17.2)	75/63	54.2	46.7	74.9	6.30	8.6						
			80/67	58.3	48.5	79.1	6.32	9.2						
			85/71	62.5	50.3	83.4	6.34	9.9						

NOTE: See Legend and Notes on page 25.

LEGEND AND NOTES FOR PAGES 13-24

LEGEND

AHRI — Air-Conditioning, Heating, and Refrigeration Institute
db — Dry Bulb
COP — Coefficient of Performance
EAT — Entering Air Temperature (F)
EER — Energy Efficiency Ratio
EWT — Entering Water Temperature (F)
FOH — Feet of Heat
GPM — Gallons per Minute
ISO — International Organization for Standardization
LWT — Leaving Water Temperature
MBtuh — Btuh in Thousands
wb — Wet Bulb
WPD — Water Pressure Differential

NOTES:
1. Interpolation is permissible; extrapolation is not.
2. AHRI/ISO certified conditions are 80.6 F db and 66.2 F wb in cooling and 68 F db in heating.
3. Table does not reflect fan or pump power corrections for AHRI/ISO conditions.
4. Operation below 40 F EWT is based on a 15% antifreeze solution.
5. See Carrier WSHP Builder selection software for operating conditions other than those listed.

ANTIFREEZE CORRECTION TABLE

ANTIFREEZE TYPE	ANTIFREEZE %	COOLING			HEATING		WPD CORRECTION FACTOR
		EWT 90 F			EWT 30 F		
		Total Capacity	Sensible Capacity	kW	Heating Capacity	kW	EWT 30 F
Water	0	1.000	1.000	1.000	1.000	1.000	1.000
Propylene Glycol	5	0.997	0.997	1.004	0.989	0.997	1.060
	10	0.994	0.994	1.006	0.986	0.995	1.125
	15	0.990	0.990	1.009	0.978	0.988	1.190
	25	0.983	0.983	1.016	0.960	0.979	1.300
Methanol	5	0.997	0.997	1.003	0.990	0.997	1.060
	10	0.996	0.996	1.005	0.979	0.993	1.100
	15	0.994	0.994	1.008	0.970	0.990	1.140
Ethanol	5	0.998	0.998	1.002	0.981	0.994	1.160
	10	0.996	0.996	1.004	0.960	0.988	1.230
	15	0.992	0.992	1.006	0.944	0.983	1.280
	25	0.986	0.986	1.009	0.917	0.974	1.400
Ethylene Glycol	5	0.997	0.997	1.003	0.993	0.998	1.060
	10	0.995	0.995	1.004	0.986	0.996	1.120
	15	0.992	0.992	1.005	0.980	0.993	1.190
	25	0.988	0.988	1.009	0.970	0.990	1.330
	30	0.985	0.985	1.012	0.965	0.987	1.400

LEGEND

EWT — Entering Wet Bulb
WPD — Water Pressure Differential

→ **50PCH,PCV (007-070), 50PCD (015-070) BLOWER PERFORMANCE — STANDARD PSC UNIT**

50PCH, PCV, PCD*	FAN SPEED	RATED AIRFLOW	AIRFLOW (cfm) AT EXTERNAL STATIC PRESSURE (in. wg)											
			0.10	0.20	0.30	0.40	0.50	0.60	0.70	0.80	0.90	1.00	1.10	1.20
007	Low	300	370	340	295	250	—	—	—	—	—	—	—	—
	Med		390	360	330	300	260	—	—	—	—	—	—	—
	High		410	380	350	315	280	210	—	—	—	—	—	—
009	Low	350	370	340	295	250	—	—	—	—	—	—	—	—
	Med		390	360	330	300	260	—	—	—	—	—	—	—
	High		410	380	350	315	280	210	—	—	—	—	—	—
012	Low	400	300	290	290	300	—	—	—	—	—	—	—	—
	Med		380	380	360	330	290	—	—	—	—	—	—	—
	High		420	400	380	360	340	320	—	—	—	—	—	—
015	Low	500	320	300	280	—	—	—	—	—	—	—	—	—
	Med		380	370	360	340	330	—	—	—	—	—	—	—
	High		520	500	480	460	430	400	340	—	—	—	—	—
018	Low	650	630	590	560	—	—	—	—	—	—	—	—	—
	Med		810	790	760	730	680	590	—	—	—	—	—	—
	High		1010	970	920	870	800	680	530	—	—	—	—	—
024	Low	850	650	610	570	540	510	—	—	—	—	—	—	—
	Med		830	820	800	770	720	620	—	—	—	—	—	—
	High		1050	1000	950	910	840	710	570	—	—	—	—	—
030	Low	950	740	730	700	660	610	—	—	—	—	—	—	—
	Med		830	810	770	730	680	620	—	—	—	—	—	—
	High		1000	950	900	830	750	690	630	—	—	—	—	—
036	Low	1200	1290	1250	1200	1150	1080	1000	—	—	—	—	—	—
	Med		1410	1350	1290	1220	1150	1060	900	—	—	—	—	—
	High		1500	1440	1370	1290	1210	1120	1000	900	—	—	—	—
042	Low	1400	1210	1210	1190	1160	1120	1080	—	—	—	—	—	—
	Med		1460	1450	1430	1390	1330	1250	1160	—	—	—	—	—
	High		1750	1710	1670	1620	1560	1460	1330	1210	1080	—	—	—
048	Low	1600	1450	1440	1420	1400	1360	1320	—	—	—	—	—	—
	Med		1700	1670	1630	1580	1530	1470	1400	—	—	—	—	—
	High		1930	1870	1810	1740	1670	1600	1520	1430	1340	—	—	—
060	Low	2000	1560	1550	1540	1530	1505	1475	1440	1400	—	—	—	—
	Med		1890	1880	1870	1860	1825	1790	1730	1670	1590	1500	—	—
	High		2220	2200	2150	2100	2050	2000	1940	1870	1800	1700	1590	—
070	Low	2100	1570	1560	1550	1540	1530	1505	1475	1440	1400	—	—	—
	Med		1900	1890	1880	1870	1860	1825	1790	1730	1670	1590	1500	—
	High		2240	2220	2200	2150	2100	2050	2000	1940	1870	1800	1700	1590

*PCD only available for unit sizes 015-070.

50PCH,PCV, PCD BLOWER PERFORMANCE — CONSTANT TORQUE MOTOR

50PCH, PCV, PCD	TAP #	RATED AIRFLOW	AIRFLOW (cfm) AT EXTERNAL STATIC PRESSURE (in. wg)											
			0.10	0.20	0.30	0.40	0.50	0.60	0.70	0.80	0.90	1.00	1.10	1.20
015	1	500	480	440	410	370	340	—	—	—	—	—	—	—
	2		530	490	450	420	380	340	—	—	—	—	—	—
	3		600	560	510	470	440	410	370	—	—	—	—	—
	4		650	600	560	520	500	480	440	380	—	—	—	—
	5		710	660	620	580	550	520	490	470	—	—	—	—
018	1	650	630	590	560	530	490	—	—	—	—	—	—	—
	2		720	700	670	630	600	560	—	—	—	—	—	—
	3		790	770	750	710	670	620	560	—	—	—	—	—
	4		910	890	850	810	740	670	590	520	—	—	—	—
	5		1010	970	920	860	810	750	660	530	—	—	—	—
024	1	850	650	610	580	560	520	—	—	—	—	—	—	—
	2		740	720	690	660	620	570	—	—	—	—	—	—
	3		850	830	800	770	730	690	630	—	—	—	—	—
	4		950	920	890	870	840	820	770	650	—	—	—	—
	5		1160	1110	1050	990	920	800	670	560	—	—	—	—
030	1	950	620	600	570	540	490	—	—	—	—	—	—	—
	2		730	710	670	640	610	550	—	—	—	—	—	—
	3		820	790	760	740	710	670	630	—	—	—	—	—
	4		940	910	880	850	800	740	660	—	—	—	—	—
	5		1070	1010	950	900	840	760	670	—	—	—	—	—
036	1	1200	1120	1090	1055	1030	1000	—	—	—	—	—	—	—
	2		1260	1230	1200	1170	1140	1080	—	—	—	—	—	—
	3		1330	1293	1253	1210	1167	1100	1030	—	—	—	—	—
	4		1400	1357	1307	1250	1193	1120	1040	963	—	—	—	—
	5		1470	1420	1360	1290	1220	1140	1050	970	890	—	—	—
042	1	1400	1270	1250	1230	1210	—	—	—	—	—	—	—	—
	2		1440	1420	1410	1410	1400	1380	1340			—	—	—
	3		1540	1530	1510	1500	1490	1470	1430	1350		—	—	—
	4		1650	1630	1610	1600	1580	1530	1460	1360	1240	—	—	—
	5		1730	1720	1700	1670	1620	1570	1490	1380	1260	1100	—	—
048	1	1600	1390	1370	1350	1320	—	—	—	—	—	—	—	—
	2		1600	1580	1550	1530	1510	—	—	—	—	—	—	—
	3		1730	1700	1670	1650	1630	1600	1580	1540	—	—	—	—
	4		1830	1810	1780	1760	1740	1710	1670	1600	1520	—	—	—
	5		1930	1910	1880	1860	1830	1780	1720	1640	1540	1420	—	—
060	1	2000	1900	1880	1860	1820	—	—	—	—	—	—	—	—
	2		2000	1970	1950	1920	1890	1860	—	—	—	—	—	—
	3		2110	2090	2060	2030	2010	1970	1940	1910	1880	—	—	—
	4		2220	2200	2170	2140	2110	2080	2050	2060	2050	2000	1920	—
	5		2340	2320	2290	2260	2230	2210	2180	2150	2110	2070	2000	1930
070	1	2100	2050	2010	1970	1930	—	—	—	—	—	—	—	—
	2		2150	2120	2080	2030	1990	1960	—	—	—	—	—	—
	3		2270	2230	2200	2160	2120	2080	2040	2010	1980	—	—	—
	4		2390	2350	2320	2280	2250	2200	2160	2130	2100	2070	2030	—
	5		2520	2480	2450	2420	2380	2330	2290	2260	2220	2170	2100	2020

Electrical data

→ 50PCH,PCV (007-070), 50PCD (015-070) UNIT WITH STANDARD BLOWER MOTOR ELECTRICAL DATA

50PCH,PCV, PCD*	VOLTAGE CODE	RATED VOLTAGE v-ph-Hz	VOLTAGE MIN/MAX	COMPRESSOR			Fan Motor FLA	Fan Motor HP	Total Unit FLA	Min Circuit amp	Max Fuse/ HACR
				QTY	RLA	LRA					
007	0	115-1-60	103/126	1	5.0	36.2	2.20	0.10	7.20	8.5	15
	1	208/230-1-60	187/253	1	2.6	17.7	0.96	0.10	3.56	4.2	15
	2	265-1-60	238/292	1	2.6	13.5	0.96	0.10	3.56	4.2	15
009	0	115-1-60	103/126	1	7.0	45.6	2.20	0.10	9.20	11.0	15
	1	208/230-1-60	187/253	1	3.4	22.2	0.96	0.10	4.36	5.2	15
	2	265-1-60	238/292	1	2.9	18.8	0.85	0.10	3.75	4.5	15
012	0	115-1-60	103/126	1	9.6	58.4	2.20	0.10	11.80	14.2	20
	1	208/230-1-60	187/253	1	4.6	28.0	0.96	0.10	5.56	6.7	15
	2	265-1-60	238/292	1	3.8	22.2	0.85	0.10	4.65	5.6	15
015	1	208/230-1-60	187/253	1	5.6	29.0	0.96	0.10	6.56	8.0	15
	2	265-1-60	238/292	1	4.6	20.0	0.85	0.10	5.45	6.6	15
018	1	208/230-1-60	187/253	1	6.5	43.0	1.80	0.25	8.30	9.9	15
	2	265-1-60	238/292	1	5.8	46.0	1.60	0.25	7.40	8.9	15
024	1	208/230-1-60	187/253	1	7.4	43.0	1.80	0.25	9.20	11.1	15
	2	265-1-60	238/292	1	6.7	46.0	1.60	0.25	8.30	10.0	15
	3	208/230-3-60	187/253	1	5.9	63.0	1.80	0.25	7.70	9.2	15
	4	460-3-60	414/506	1	2.9	30.0	0.90	0.25	3.80	4.5	15
030	1	208/230-1-60	187/253	1	9.9	54.0	1.80	0.25	11.70	14.2	20
	2	265-1-60	238/292	1	8.5	46.0	1.60	0.25	10.10	12.2	20
	3	208/230-3-60	187/253	1	6.9	63.0	1.80	0.25	8.70	10.4	15
	4	460-3-60	414/506	1	5.4	30.0	0.90	0.25	6.30	7.7	15
036	1	208/230-1-60	187/253	1	13.0	74.0	4.40	0.50	17.40	20.7	30
	2	265-1-60	238/292	1	11.3	67.0	3.30	0.50	14.60	17.4	25
	3	208/230-3-60	187/253	1	7.8	68.0	4.40	0.50	12.20	14.2	20
	4	460-3-60	414/506	1	3.9	34.0	1.80	0.50	5.70	6.7	15
042	1	208/230-1-60	187/253	1	13.6	88.0	4.40	0.50	18.00	21.4	35
	3	208/230-3-60	187/253	1	8.8	68.0	4.40	0.50	13.20	15.4	20
	4	460-3-60	414/506	1	4.4	34.0	1.80	0.50	6.20	7.3	15
048	1	208/230-1-60	187/253	1	13.6	88.0	4.40	0.50	18.00	21.4	35
	3	208/230-3-60	187/253	1	8.8	68.0	4.40	0.50	13.20	15.4	20
	4	460-3-60	414/506	1	4.4	34.0	1.80	0.50	6.20	7.3	15
	5	575-3-60	517/633	1	15.7	84.0	4.40	0.75	20.10	24.0	35
060	1	208/230-1-60	187/253	1	11.0	88.0	4.40	0.75	15.40	18.2	25
	3	208/230-3-60	187/253	1	5.4	44.0	2.80	0.75	8.20	9.6	15
	4	460-3-60	414/506	1	4.4	36.0	2.60	0.75	7.00	8.1	15
	5	575-3-60	517/633	1	26.3	134.0	5.50	0.75	31.80	38.4	60
070	1	208/230-1-60	187/253	1	15.6	110.0	5.50	0.75	21.10	25.0	40
	3	208/230-3-60	187/253	1	7.8	52.0	2.80	0.75	10.60	12.6	20
	4	460-3-60	414/506	1	5.8	38.9	2.60	0.75	8.40	9.9	15
	5	575-3-60	517/633	1	28.3	178.0	5.50	0.75	33.80	40.9	60

LEGEND

FLA — Full Load Amps
HACR — Heating, Air-Conditioning and Refrigeration
LRA — Locked Rotor Amps
RLA — Rated Load Amps

*PCD only available for unit sizes 015-070.

50PCH,PCV, PCD UNIT WITH CONSTANT TORQUE BLOWER MOTOR ELECTRICAL DATA

50PCH,PCV, PCD	VOLTAGE CODE	RATED VOLTAGE v-ph-Hz	VOLTAGE MIN/MAX	COMPRESSOR			Fan Motor FLA	Fan Motor HP	Total Unit FLA	Min Circuit amp	Max Fuse/ HACR
				QTY	RLA	LRA					
015	1	208/230-1-60	187/253	1	5.6	29	2.8	0.33	8.4	9.8	15
	2	265-1-60	238/292	1	4.6	20	2.6	0.33	7.2	8.4	15
018	1	208/230-1-60	187/253	1	6.5	43	2.8	0.33	9.3	10.9	15
	2	265-1-60	238/292	1	5.8	46	2.6	0.33	8.4	9.9	15
024	1	208/230-1-60	187/253	1	7.4	43	2.8	0.33	10.2	12.1	15
	2	265-1-60	238/292	1	6.7	46	2.6	0.33	9.3	11.0	15
	3	208/230-3-60	187/253	1	5.9	63	2.8	0.33	8.7	10.2	15
	4	460-3-60	414/506	1	2.9	30	2.1	0.50	5.0	5.7	15
030	1	208/230-1-60	187/253	1	9.9	54	2.8	0.33	12.7	15.2	25
	2	265-1-60	238/292	1	8.5	46	2.6	0.33	11.1	13.2	20
	3	208/230-3-60	187/253	1	6.9	63	2.8	0.33	9.7	11.4	15
	4	460-3-60	414/506	1	5.4	30	2.1	0.50	7.5	8.9	15
036	1	208/230-1-60	187/253	1	13.0	74	4.1	0.50	17.1	20.4	30
	2	265-1-60	238/292	1	11.3	67	3.9	0.50	15.2	18.0	25
	3	208/230-3-60	187/253	1	7.8	68	4.1	0.50	11.9	13.9	20
	4	460-3-60	414/506	1	3.9	34	2.1	0.50	6.0	7.0	15
042	1	208/230-1-60	187/253	1	13.6	88	6.0	0.75	19.6	23.0	35
	3	208/230-3-60	187/253	1	8.8	68	6.0	0.75	14.8	17.0	25
	4	460-3-60	414/506	1	4.4	34	4.6	0.75	9.0	10.1	15
048	1	208/230-1-60	187/253	1	15.7	84	6.0	0.75	21.7	25.6	40
	3	208/230-3-60	187/253	1	11.0	88	6.0	0.75	17.0	19.8	30
	4	460-3-60	414/506	1	5.4	44	4.6	0.75	10.0	11.4	15
	5	208/230-1-60	187/253	1	26.3	145	7.6	1.00	33.9	40.5	60
060	1	208/230-3-60	187/253	1	15.6	123	7.6	1.00	23.2	27.1	40
	3	460-3-60	414/506	1	7.8	70	4.0	1.00	11.8	13.8	20
	4	208/230-1-60	187/253	1	28.3	158	7.6	1.00	35.9	43.0	70
	5	208/230-3-60	187/253	1	19.2	155	7.6	1.00	26.8	31.6	50
070	1	460-3-60	414/506	1	8.7	75	4.0	1.00	12.7	14.9	20
	3	208/230-1-60	187/253	1	5.6	29	2.8	0.33	8.4	9.8	15
	4	265-1-60	238/292	1	4.6	20	2.6	0.33	7.2	8.4	15

LEGEND

FLA — Full Load Amps
HACR — Heating, Air-Conditioning and Refrigeration
LRA — Locked Rotor Amps
RLA — Rated Load Amps

Application data

Aquazone™ water source heat pumps are available in a flexible, efficient array of models, which can be used in all types of water loop, ground water, and ground loop type systems. Aquazone products provide optimal energy efficient solutions and adapt to the most challenging design requirements.

Water loop system

Water loop (or boiler/tower) system applications typically include a number of units plumbed to a common piping system. For optimal performance, this system should be designed between 2.25 and 3 gpm per ton of cooling capacity. The system is comprised of highly efficient packaged reverse cycle heat pump units interconnected by a water loop. The water circuit serves as both a sink and source for heat absorption and rejection and is designed for entering water temperatures between 50 and 80 F. Within this temperature range units can heat or cool as required from the same water source. Transferring heat from warm to cold spaces in the building, whenever they coexist, conserves energy rather than creating new heat.

Refer to the **Carrier Water Source Heat Pump System Design Guide** for assistance designing water loop systems. The guide includes a practical approach for the most current design recommendations including:

- Product application including horizontal, vertical, console, rooftop and water-to-water applications.
- Ventilation methods and system design including energy recovery.
- Acoustical considerations for different product types.
- Addressing indoor air quality (IAQ) issues such as condensate removal, humidity control.
- Air distribution design including diffuser selection/layout and ductwork design.
- Hydronic system design including pipe sizing/layout and boiler/tower sizing.
- Control configurations such as stand alone, DDC, DCV, and VVT® controls.
- Water Source Heat Pump Efficiency/Operational Cost Comparison chart.
- System variations such as a system without a boiler, variable pumping, and VAV for interior use.

Condensate drainage

Venting — Properly vent condensate lines to prevent fan pressure from causing water to hang up in the piping. Condensate lines should be pitched to assure full drainage of condensate under all load conditions. Use chemical treatment to remove algae in the condensate pans and drains in geographical areas that are conducive to algae growth.

Trapping — Condensate trapping is a necessity on every water source heat pump unit. A trap is provided to prevent the backflow of moisture from the condensate pan and into the fan intake or downstream into the mechanical system. The water seal or the length of the trap depends on the positive or negative pressure on the drain pan. As a rule of thumb, size the water seal 1 in. for every 1 in. of negative pressure on the unit. The water seal is the distance from the bottom of the unit condensate piping connection to the bottom of the condensate drain line run-out piping. Therefore, the trap size should be double the water seal dimension.

Horizontal units — Horizontal units should be sloped toward the drain at a $^1/_4$ in. per foot pitch. If it is not possible to meet the pitch requirement, a condensate pump should be designed and installed at the unit to pump condensate to a building drain. Horizontal units are not internally trapped; therefore an external trap is necessary. Each unit must be installed with its own individual trap and means to flush or blow out the condensate drain. It is not acceptable to use a common trap or vent for multiple units. The condensate piping system should not be designed with a pipe size smaller than the drain connection pipe size.

Vertical units — Vertical units use a condensate hose inside the cabinet that acts as a trapping loop, making an external trap unnecessary. Install each unit with its own vent and means to flush or blow out the condensate drain lines. Do not install a common trap or vent on vertical units.

Water conditioning

In some applications, maintaining proper water quality may require higher corrosion protection for the water-to-refrigerant heat exchanger. Water quality varies from location to location and is unique for each job. Water characteristics such as pH value, alkalinity, hardness, and specific conductance are important when considering any WSHP application. Water typically includes impurities and hardness that must be removed. The required treatment will depend on the water quality as well as type of system. Water problems fall into three main categories:

1. Scale formation caused by hard water reduces the heat transfer rate and increases the water pressure drop through the heat exchanger. As water is heated, minerals and salts are precipitated from a solution and deposited on the inside surface of the pipe or tube.
2. Corrosion is caused by absorption of gases from the air coupled with water on exposed metal. Corrosion is also common in salt-water areas.
3. Organic growths such as algae can reduce the heat transfer rate by forming an insulating coating on the inside tube surface. Algae can also promote corrosion by pitting.

NOTE: In most commercial water loop applications, Aquazone WSHP units use copper water-to-refrigerant heat exchanger. Units can also be equipped with a cupronickel heat exchanger for applications where water is outside the standard contaminant limits for a copper heat exchanger.

WATER QUALITY GUIDELINES

CONDITION	HX MATERIAL*	CLOSED RECIRCULATING†	OPEN LOOP AND RECIRCULATING WELL**		
Scaling Potential — Primary Measurement					
Above the given limits, scaling is likely to occur. Scaling indexes should be calculated using the limits below.					
pH/Calcium Hardness Method	All	N/A	**pH < 7.5 and Ca Hardness, <100 ppm**		
Index Limits for Probable Scaling Situations (Operation outside these limits is not recommended.)					
Scaling indexes should be calculated at 150 F for direct use and at 90 F for indirect HX use. A monitoring plan should be implemented.					
Ryznar Stability Index	All	N/A	**6.0 to 7.5** If >7.5 minimize steel pipe use.		
Langelier Saturation Index	All	N/A	**–0.5 to +0.5** If <=0.5 minimize steel pipe use. Based upon 150 F direct well, 85 F indirect well HX.		
Iron Fouling					
Iron Fe^{2+} (Ferrous) (Bacterial Iron Potential)	All	N/A	**<0.2 ppm (Ferrous)** If Fe^{2+} (ferrous) >0.2 ppm with pH 6 to 8, O_2<5 ppm, check for iron bacteria.		
Iron Fouling	All	N/A	**<0.5 ppm of Oxygen** Above this level deposition will occur.		
Corrosion Prevention††					
pH	All	6 - 8.5 Monitor/treat as needed.	**6 to 8.5** Minimize steel pipe below 7 and no open tanks with pH <8.		
Hydrogen Sulfide (H_2S)	All	N/A	**<0.5 ppm** At H_2S>0.2 ppm, avoid use of copper and cupronickel piping or HXs. Rotten egg smell appears at 0.5 ppm level. Copper alloy (bronze or brass) cast components are acceptable to <0.5 ppm.		
Ammonia Ion as Hydroxide, Chloride, Nitrate and Sulfate Compounds	All	N/A	**<0.5 ppm**		
Maximum Chloride Levels			Maximum allowable at maximum water temperature.		
			50 F (10 C)	75 F (24 C)	100 F (38 C)
	Copper	N/A	<20 ppm	NR	NR
	Cupronickel	N/A	<150 ppm	NR	NR
	304 SS	N/A	<400 ppm	<250 ppm	<150 ppm
	316 SS	N/A	<1000 ppm	<550 ppm	<375 ppm
	Titanium	N/A	>1000 ppm	>550 ppm	>375 ppm
Erosion and Clogging					
Particulate Size and Erosion	All	<10 ppm of particles and a maximum velocity of 6 fps. Filtered for maximum 800 micron size.	<10 ppm (<1 ppm "sandfree" for reinjection) of particles and a maximum velocity of 6 fps. Filtered for maximum 800 micron size. Any particulate that is not removed can potentially clog components.		
Brackish	All	N/A	Use cupronickel heat exchanger when concentrations of calcium or sodium chloride are greater than 125 ppm are present. (Seawater is approximately 25,000 ppm.)		

LEGEND

HX — Heat Exchanger
N/A — Design Limits Not Applicable Considering Recirculating Potable Water
NR — Application Not Recommended
SS — Stainless Steel

*Heat exchanger materials considered are copper, cupronickel, 304 SS (stainless steel), 316 SS, titanium.
†Closed recirculating system is identified by a closed pressurized piping system.
**Recirculating open wells should observe the open recirculating design considerations.

††If the concentration of these corrosives exceeds the maximum allowable level, then the potential for serious corrosion problems exists.

Sulfides in the water quickly oxidize when exposed to air, requiring that no agitation occur as the sample is taken. Unless tested immediately at the site, the sample will require stabilization with a few drops of one Molar zinc acetate solution, allowing accurate sulfide determination up to 24 hours after sampling. A low pH and high alkalinity cause system problems, even when both values are within ranges shown. The term pH refers to the acidity, basicity, or neutrality of the water supply. Below 7.0, the water is considered to be acidic. Above 7.0, water is considered to be basic. Neutral water registers a pH of 7.0.

To convert ppm to grains per gallon, divide by 17. Hardness in mg/l is equivalent to ppm.

Guide specifications

Packaged Water Source Heat Pumps

HVAC Guide Specifications (Water Loop)

Size Range: **6,100 to 64,000 Btuh Cooling Capacity**
7,800 to 72,800 Btuh Heating Capacity

Carrier Unit: **50PCH, 50PCV, 50PCD Series 60 Hz**

Part 1 — General

1.01 SYSTEM DESCRIPTION

A. Install water source heat pumps, as indicated on the plans with capacities and characteristics as listed in the schedule and the specifications that follow. Units shall be horizontal or vertical configurations. All equipment shall be rated and certified in accordance with AHRI/ISO 13256-1. All equipment shall be tested, investigated, and determined to comply with the requirements of the standards for Heating and Cooling Equipment UL-1995 for the United States and CAN/CSA-C22.2 NO.236 for Canada, by Intertek Testing Laboratories (ETL). The units shall have AHRI/ISO and ETL-US-C labels.

B. Units shall be supplied completely factory built and capable of operation with an entering water temperature range from 50 to 100 F. Quality control system shall automatically perform via computer: triple leak check, pressure tests, evacuation and accurately charging of system, detailed heating and cooling mode tests, and quality cross checking all operational and test conditions to pass/fail criteria.

C. Units shall be individually packaged on wooden skid with protective corner posts and plastic stretch wrapping for maximum protection.

1.02 QUALITY ASSURANCE

A. All equipment listed in this section must be rated in accordance with AHRI/ASHRAE/ISO 13256-1 performance standard, latest edition. The applicable units shall have a AHRI/ISO label. Standard cabinet panel insulation shall meet NFPA 90A requirements, air erosion and mold growth limits of UL-181, stringent fungal resistance test per ASTM-C1071 and ASTM G21, and shall meet zero level bacteria growth per ASTM G22.

B. All units shall be factory tested in all operating modes and safety switch operation shall be verified.

C. Serial numbers will be recorded by factory and furnished to contractor for ease of unit warranty status.

1.03 WARRANTY:

The manufacturer shall warranty equipment for a period of 12 months from start-up or 18 months from shipping (whichever occurs first).

Part 2 — Product

2.01 EQUIPMENT

A. General:

1. The horizontal and vertical heat pumps shall be fabricated from heavy gage G-90 galvanized sheet metal. All interior surfaces shall be lined with $^1/_2$-in. thick acoustic type fiberglass insulation. Insulation placement shall be designed in a manner that will eliminate any exposed edges, and shall be coated and have exposed edges tucked under flanges to prevent the introduction of glass fibers into the airstream. All insulation must meet NFPA 90A, UL-181 (air erosion and mold growth), ASTM-C1071, and ASTM 21 and 22.
2. Units shall be prewired and precharged in factory.

B. Basic Construction:

1. Units shall have the air flow arrangement as shown on the plans. If units with these arrangements are not used, the contractor supplying the water source heat pumps is responsible for any extra costs incurred by other trades and must submit detailed mechanical drawings showing ductwork requirements and changes or relocation of any other mechanical or electrical system. If other arrangements make servicing difficult, the contractor must provide access panels and clear routes to ease service. The architect must approve all changes 10 days prior to bid.
2. All units shall have stainless steel drain pans to comply with this project's IAQ requirements. Painted steel or plastic is not acceptable.
3. The cabinet shall be fabricated from heavy-gage G-90 galvanized steel for superior corrosion protection. All interior surfaces shall be lined with $^1/_2$-in. (12.7 mm) thick, multi density, coated, glass fiber insulation. Insulation within the air handling section shall not have any exposed edges. All insulation must meet NFPA 90A and be certified to meet the GREENGUARD Indoor Air Quality Standard for Low Emitting Products. One blower access panel and two compressor compartment access panels shall be removable with supply and return air ductwork in place.
4. Unit shall have a floating compressor or pan consisting of a $^1/_2$-in. (12 mm) thick high density elastomeric pad between the compressor base plate and the unit base pan to prevent transmission of vibration to the structure.
5. Units shall have a 1-in. filter rack and 1-in. thick throwaway type glass fiber filter as standard. Units shall have an optional 2-in. thick pleated MERV 8 filter (size 007-070) or MERV 13 filter (size 015 and larger) available. The filter rack shall incorporate a 1-in. duct flange. The units shall have an insulated divider panel between the air handling section and the compressor section to minimize the transmission of compressor noise, and to permit service testing without air bypass.
6. Cabinets shall have separate holes and knockouts for entrance of line voltage and low voltage control wiring. Supply and return water connections shall be brass female pipe thread fittings and mounted flush to cabinet exterior.

Connections that require a backup wrench or that extrude past the unit corner post are not acceptable. Condensate connection will be stainless steel female pipe thread fittings. Plastic is not acceptable

7. Hanging brackets shall be provided as standard for horizontal units.

C. Fan and Motor Assembly:

1. The fan shall be direct-drive centrifugal forward curved type with a dynamically balanced wheel. The housing and wheel shall be designed for quiet low velocity operation. The blower housing shall feature a removable inlet ring to facilitate removal and servicing of the fan motor. The fan motor shall be 3-speed, permanently lubricated, PSC type with thermal overload protection.
2. Units rated 15,000 to 70,000 Btuh shall have an optional constant torque electronically commutated motor for premium fan efficiency. These motors shall feature 5 pre-programmed torque settings that can be changed in the field to match design requirements. 460V-3Ph-60Hz units with these motors must be able to operate without the need for a neutral wire for the motor.
3. Blower shall have inlet rings to allow removal of wheel and motor from one side without removing housing.
4. Units supplied without permanently lubricated motors must provide external oilers for easy service.
5. The fan and motor assembly must be capable of overcoming the external static pressures as shown on the schedule.
6. The airflow/static pressure rating of the unit shall be based on a wet coil and a clean filter in place.

D. Refrigerant Components:

1. Units shall use R-410A refrigerant. All units shall have a factory sealed and fully charged refrigerant circuit.
2. Hermetic Compressor:

   Hermetic reciprocating, rotary, or scroll compressors shall be specifically designed for R-410A refrigerant and shall be internally sprung (if reciprocating), externally isolated and with thermal overload protection.
3. Refrigerant metering thermal expansion valves or capillary tubes.
4. The finned tube heat exchanger shall be constructed of lanced aluminum fins not exceeding sixteen fins per inch bonded to rifled copper tubes in a staggered pattern and will have a 600 psig (4140 kPa) working pressure. The heat exchanger shall have aluminum end sheets.

   The finned tube heat exchanger shall have an optional protective coil coating. This corrosion protection shall consist of tin plated copper tubing with coated aluminum fins that must pass 1,000 hours of ASTM B117 salt fog testing. Painted, dipped or e-coated heat exchangers are not acceptable.
5. Reversing Valve:

   Reversing valves shall be four-way solenoid activated refrigerant valves that shall fail to the heating operation should the solenoid fail to function. Reversing valves that fail to the cooling operation shall not be allowed.
6. Coaxial (tube in tube) refrigerant to water heat exchanger. Refrigerant to water heat exchangers shall be of copper inner water tube and steel outer refrigerant tube design rated to withstand 600 psig working refrigerant pressure and 400 psig working water pressure. Shell and tube style refrigerant to water heat exchangers shall be treated as pressure vessels and shall require refrigerant pressure relief valves piped to the exterior of the building. The contractor supplying the water source heat pumps with shell and tube heat exchangers shall be responsible for any additional installation costs. Brazed plate water to refrigerant heat exchangers shall require additional centrifugal separators added to the supply water piping at each unit. Each separator shall have an automated clean out valve piped to a waste line. The contractor supplying water source heat pumps with brazed plate heat exchangers shall be responsible for any additional costs.
7. Safety controls include both a high pressure and low pressure switch. Temperature sensors shall not replace these safety switches. See the unit controls section.
8. Access fittings shall be factory installed on high and low pressure refrigerant lines to facilitate field service.
9. Activation of any safety device shall prevent compressor operation via a lockout circuit. The lockout circuit shall be reset at the thermostat or at the contractor supplied disconnect switch. Units which may be reset at the disconnect switch only shall not be acceptable.

E. Controls and Safeties:

1. Electrical:

   Controls and safety devices will be factory wired and mounted within the unit. Controls shall include fan relay, compressor contactor, 24-v transformer, reversing valve coil, solid state lockout controller and unit protection module (UPM). The standard transformer shall be rated for a minimum 50 va. All units shall be nameplated for use with time delay fuses or HACR circuit breakers. Unit controls shall be 24-v and provide heating or cooling as required by the remote thermostat/sensor.

   Optional transformers shall be rated 75 va and shall have a push button reset circuit breaker on the secondary power.

2. Piping:
   a. Supply and return water connections shall be copper FPT fittings and shall be securely mounted flush to the cabinet corner post allowing for connection to a flexible hose without the use of a backup wrench.
   b. All water connections and electrical knockouts must be in the compressor compartment corner post to not interfere with the serviceability of unit. Contractor shall be responsible for any extra costs involved in the installation of units that do not have this feature.
3. Unit Controls:
   a. Solid-State Safety Circuit:

      All units shall have a C board safety control circuit with the following features:

      1) Anti-short cycle time delay (5 minute delay on break).
      2) Random start time delay on initial power.
      3) Brown out/surge/power interruption protection.
      4) 120 second low pressure switch bypass timer.
      5) High refrigerant pressure shutdown.
      6) Low refrigerant pressure shutdown.
      7) Low water temperature shutdown (adjustable for closed loop systems).
      8) Air coil freeze protection shutdown.
      9) High condensate level shutdown.
      10) 24 vac alarm output for remote fault indication.

      The C board shall automatically reset after a safety shutdown. Restart the unit if the cause of the shutdown no longer exists (except for low temperature and high condensate level shutdowns). Should a fault re-occur within 60 minutes after reset, then a "hard" lockout will occur. A light emitting diode (LED) shall annunciate the following alarms: brown out, high refrigerant pressure, low refrigerant pressure, low water temperature and a high level of condensate in the drain pan. The LED will display each fault condition as soon as the fault occurs. If a hard lockout occurs, then the fault LED will display the type of fault until the unit is reset.

      The C board shall feature the following field configurable adjustments:

      1) Lock out reset on thermostat interruption or power reset.
      2) Two or four restart attempts before a hard lockout.
      3) Test mode (reduces all time delays to 5 seconds for diagnostic work).
      4) Antifreeze setting for low water temperature sensor.

      Safety devices include:

      1) Low pressure cutout set a 40 psig (280 kPa) for loss of charge protection (freezestat and/or high discharge gas temperature sensor is not acceptable).
      2) High pressure cutout control set at 600 psig (4125 kPa).
      3) Low supply water temperature sensor that detects drops in refrigerant temperature that could result in water coax heat exchanger freezing.
      4) Low air coil temperature sensor that detects drops in refrigerant temperature that could result in air heat exchanger freezing.
      5) High level condensate sensor that shuts off the compressor if the condensate drain pan fills with water.
      6) On board voltage detection that disables the compressor control circuit if there are extreme variations in supply voltage.

F. Special Features:
   1. Cupronickel coaxial water-to-refrigerant heat exchangers shall be provided.
   2. Evaporator coil protection shall be factory installed to provide protection from corrosion in coastal areas, marine applications or other areas in which corrosion may be an issue.
   3. Carrier commercial thermostat controls are available as follows:
      a. Edge® Pro 7-day programmable thermostat offers 2-stage heat, 2-stage cool, remote contact input, remote sensor capability, pre-occupancy purge, soft start, manual/auto changeover, 4 settings per day, 24 vac, backlit LCD, keypad lockout, no batteries required, 5-minute compressor protection, never lost memory, 3 security levels, and temperature display in degrees F or C.
      b. Comfort™ Pro 7-day programmable thermostat offers 2-stage heat, 2-stage cool, auto changeover, 4 settings per day, 24 vac, backlit LCD, keypad lockout, 5-minute compressor protection, never lost memory, 3 security levels, and temperature display in degrees F or C.
      c. Comfort™ Pro 7-day non-programmable thermostat offers 2-stage heat, 2-stage cool, auto changeover, backlit display, keypad lockout, 5-minute compressor protection, dual setpoint with adjustable deadband, never lost memory, 3 security levels, and temperature display in degrees F or C.
   4. A loop controller with six stages (2 stages for heating and 4 stages for heat rejection) shall be provided.
   5. Aquazone system control panel as specified in the 50RLP Product Data is available.

6. Sound attenuation (mute) package shall consist of high technology sound attenuating materials strategically applied to the cabinet, in addition to the standard system, to further dampen sound.

→ 7. Extended range for units operating with entering water temperatures below dew point. Extended entering water temperatures range from 25 to 110 F.